TABLE OF CONTENT - SECTION 2 - SEATS

2.1 - BACKS

2.1.1 - FIXED BACK

- BACK POST ASSEMBLY 2.1.1.1
- SIGNATURE FIXED BACKREST ASSEMBLY 2.1.1.2
- SIGNATURE FIXED BACKREST ASSEMBLY - ENDOMORPHE 2.1.1.3
- ELECTRONICS SHROUD FOR PEDIACTRIC FIXED BACK 2.1.1.4
- FIXED BACKREST WITH ELECTRONICS SHROUD, OEM BACK 2.1.1.5
- ELECTRONICS SHROUD COVER, SIGNATURE FIXED BACKREST 2.1.1.6
- FIXED BACKREST WITH ELECTRONICS SHROUD, NXT OPTIMA AND OEM BACK 2.1.1.7
- FIXED BACKREST WITH ELECTRONICS SHROUD, FOR OEM BACK 2.1.1.8

2.1.2 - POWER RECLINNING BACK

- POWER RECLINNING BACKREST 2.1.2.1
- SIGNATURE POWER RECLINING BACKREST 2.1.2.2
- POWER RECLINING BACKREST FOR ASCENT POWER STANDING MODULE 2.1.2.3
- POWER RECLINING BACKREST, E-BX 2.1.2.4

2.2 - SEAT PANS

2.2.1 - PEDIATRIC SEAT PAN

- PEDIATRIC SEAT PAN 2.2.1.1
- PEDIATRIC SEAT PAN REINFORCEMENTS 2.2.1.2
- PEDIATRIC SEAT PAN 2.2.1.3

2.2.2 - ADULT SEAT PAN

- ADULT SEAT PAN 2.2.2.1
- ADULT SEAT PAN REINFORCEMENTS 2.2.2.2
- ADULT SEAT PAN STANDER 2.2.2.3
- ADULT SEAT PAN 2.2.2.4

2.3 - ARMRESTS

2.3.1 - CANTILEVER ARMREST

- CANTILEVER ARMREST 2.3.1.1
- SIGNATURE CANTILEVER ARMREST 2.3.1.2
- CANTILEVER ARMREST FOR STANDER 2.3.1.3

2.3.2 - DUAL POST ARMREST

- DUAL POST ARMREST ASSEMBLY 2.3.2.1
- DUAL POST ARMREST ASSEMBLY ABX2 ..... 2.3.2.2

2.3.3 - RECLINNING BACK ARMREST

- RECLINING ARMREST ASSEMBLY 2.3.3.1
- RECLINING ARMREST ASSEMBLY 2.3.3.2
- SIGNATURE RECLINING ARMREST ASSEMBLY 2.3.3.3
- SIGNATURE RECLINING HD ARMREST ASSEMBLY 2.3.3.4

2.3.4 - SINGLE POST ARMREST

- SINGLE POST ARMREST ASSEMBLY 2.3.4.1
- SINGLE POST ARMREST ASSEMBLY 2.3.4.2

2.4 - CENTER MOUNT FOOTBOARD

2.4.1 - FIXED CENTER MOUNT FOOTBOARD

- 90° FIXED CENTER MOUNT FOOTBOARD 2.4.1.1
- 90° FIXED CENTER MOUNT FOOTBOARD 2.4.1.2
- 90° FIXED CENTER MOUNT FOOTBOARD 2.4.1.3

2.4.2 - POWER ELEVATING CENTER MOUNT FOOTBOARD

- POWER ELEVATING CENTER MOUNT FOOTBOARD 2.4.2.1
- VHD POWER ELEVATING CENTRE MOUNT FOOTBOARD 2.4.2.2
- POWER ELEVATING AND ARTICULATING CENTER MOUNT FOOT PLATFORM 2.4.2.3
- POWER ELEVATING AND ARTICULATING CENTER MOUNT FOOT PLATFORM 2.4.2.4
- POWER ELEVATING AND ARTICULATING CENTER MOUNT FOOT PLATFORM - **New** 2.4.2.5
- POWER ELEVATING AND ARTICULATING CENTER MOUNT FOOT PLATFORM, E-BX 2.4.2.6
- POWER ELEVATING AND ARTICULATING CENTER MOUNT FOOT PLATFORM, E-BX 2.4.2.7
- POWER ELEVATING AND ARTICULATING CENTER MOUNT FOOT PLATFORM, E-BX - **New** 2.4.2.8

2.5 - LEG RESTS

2.5.1 - OEM LEG REST RECEIVERS

- OEM LEG REST RECEIVERS 2.5.1.1

2.5.2 - STANDARD (PEDIATRIC) SWING-AWAY FOOTRESTS

- SIGNATURE STANDARD (PEDIATRIC) SWING-AWAY FOOTRESTS 2.5.2.1

2.5.3 - STANDARD SWING-AWAY FOOTREST

- STANDARD SWING-AWAY FOOTREST 2.5.3.1
- SIGNATURE STANDARD SWING-AWAY FOOTREST 2.5.3.2

2.5.4 - HEAVY DUTY SWING-AWAY FOOTREST

- HEAVY DUTY SWING-AWAY FOOTREST 2.5.4.1
- SIGNATURE HEAVY DUTY SWING-AWAY FOOTREST 2.5.4.2

2.5.5 - POWER ELEVATING AND ARTICULATING LEGRESTS

- POWER ELEVATING AND ARTICULATING LEGREST 2.5.5.1
- POWER ELEVATING AND ARTICULATING LEGREST 2.5.5.2
- POWER ELEVATING AND ARTICULATING LEGREST - E-BX 2.5.5.3
- SIGNATURE POWER ELEVATING & ARTICULATING SWING-AWAY LEGREST - E-BX 2.5.5.4

2.5.6 - MANUAL ELEVATING AND ARTICULATING LEGRESTS

- MANUAL ELEVATING AND ARTICULATING LEGREST 2.5.6.1
- SIGNATURE MANUAL ELEVATING AND ARTICULATING SWING-AWAY LEGREST 2.5.6.2

2.5.7 - FRONT FOOTPLATE BUMPER

- FRONT FOOTPLATE BUMPER 2.5.7.1

2.6 - HEADRESTS

2.6.1 - HEADREST

- SINGLE AXIS HEADREST HARDWARE 2.6.1.1
- SIGNATURE SINGLE AXIS HEADREST HARDWARE 2.6.1.2
- MULTI-AXIS HEADREST HARDWARE 2.6.1.3
- SIGNATURE MULTI-AXIS HEADREST HARDWARE 2.6.1.4

2.7 - POSITIONNING

2.7.1 - LATERAL TRUNK SUPPORT

- SWING AWAY LATERAL TRUNK SUPPORT 2.7.1.1
- SIGNATURE SWING AWAY LATERAL TRUNK SUPPORT 2.7.1.2

2.7.2 - HIP & THIGH SUPPORT

- THIGH GUARD HARDWARE AND PAD 2.7.2.1
- THIGH GUARD HARDWARE AND PAD 2.7.2.2
- THIGH GUARD HARDWARE AND PAD 2.7.2.3

2.7.3 - STRAPS AND BELTS

- POSITIONNING STRAP 2.7.3.1
- PADDED CHEST STRAP 2.7.3.2
- PADDED HIP BELT 2.7.3.3

2.7.4 - KNEE SUPPORT

- KNEE SUPPORT FOR ASCENT STANDING MODULE 2.7.4.1
- KNEE SUPPORT FOR ASCENT STANDING MODULE 2.7.4.2

2.7.5 - STUMP SUPPORT

- STUMP SUPPORT 2.7.5.1
- STUMP SUPPORT 2.7.5.2

LEGEND

CURRENT

- These parts and assemblies are currently being produced and delivered.*

SERVICEABLE PARTS

- These parts and assemblies are not currently being produced or delivered on new chairs, but they are available as replacement service parts.*

DISCONTINUED

- These parts and assemblies are no longer being produced or delivered on new chairs, and they are not available as replacement service parts.*

** Please contact Technical Support for information on the replacement parts and assemblies.*

2.8 - BACKS AND CUSHIONS

2.8.1 - BACK CUSHION

- STANDARD BACK CUSHION 2.8.1.1
- STANDARD BACK CUSHION 2.8.1.2
- CONTOUR BACK CUSHION SIGNATURE 2.8.1.3
- CONTOUR CUSHION FIXED BACK SIGNATURE 2.8.1.4
- NXT OPTIMA FHT AC BACK CUSHION 13 IN TO 21 IN WIDE 2.8.1.5
- NXT OPTIMA FHT AC BACK CUSHION 13 IN WIDE TO 21 IN WIDE SIGNATURE 2.8.1.6
- NXT OPTIMA FHT AC BACK CUSHION 22 IN TO 28 IN WIDE 2.8.1.7
- NXT OPTIMA FHT AC BACK CUSHION 22 IN WIDE TO 28 IN WIDE SIGNATURE 2.8.1.8
- NXT OPTIMA DEEP BACK CUSHION 13 IN WIDE TO 21 IN WIDE 2.8.1.9
- NXT OPTIMA DEEP BACK CUSHION 13 IN WIDE TO 21 IN WIDE SIGNATURE 2.8.1.10
- NXT OPTIMA DEEP BACK CUSHION 22 IN WIDE TO 28 IN WIDE 2.8.1.11
- NXT OPTIMA FHT AC BACK CUSHION 22 IN WIDE TO 28 IN WIDE SIGNATURE 2.8.1.12
- ADJUSTABLE TENSION BACKREST 2.8.1.13
- ADJUSTABLE TENSION BACKREST SIGNATURE 2.8.1.14
- MATRX ELITE E2S BACK 2.8.1.15
- MATRX ELITE E2S BACK SIGNATURE 2.8.1.16
- MATRX ELITE E2D DEEP BACK 2.8.1.17
- MATRX ELITE E2D DEEP BACK SIGNATURE 2.8.1.18
- MATRX PB ELITE TR BACK 2.8.1.19
- MATRX PB ELITE TR BACK SIGNATURE 2.8.1.20
- MATRX HEAVY DUTY ELITE BACK 2.8.1.21
- MATRX HEAVY DUTY ELITE BACK SIGNATURE 2.8.1.22
- MATRX HEAVY DUTY ELITE DEEP BACK 2.8.1.23
- MATRX HEAVY DUTY ELITE DEEP BACK SIGNATURE 2.8.1.24

2.8.2 - SEAT CUSHION

- NXT BIO FIT SEAT CUSHION 2.8.2.1
- CG AIR SEAT CUSHION 2.8.2.2
- PERFORMA CG AIR SEAT CUSHION 2.8.2.3
- PERFORMA BM SEAT CUSHION 2.8.2.4
- PERFORMA IAG SEAT CUSHION 2.8.2.5
- PERFORMA ICG SEAT CUSHION 2.8.2.6
- CONTOUR SEAT CUSHION 2.8.2.7
- CONTOUR SEAT CUSHION 2.8.2.8
- MATRX PSP CUSHION 2.8.2.9

2.9 - ACCESSORIES

2.9.1 - O_2 HOLDER

- O_2 HOLDER FOR FIXED BACK ANGLES 2.9.1.1

2.9.2 - RAM MOUNT ACCESSORIES

- RAM MOUNT UNIVERSAL X-GRIP FOR CELL & SMALL TABLET 2.9.2.1
- RAM MOUNT UNIVERSAL X-GRIP FOR CELL & SMALL TABLET 2.9.2.2
- RAM MOUNT UNIVERSAL X-GRIP FOR LARGE TABLET 2.9.2.3
- RAM MOUNT UNIVERSAL X-GRIP FOR LARGE TABLET 2.9.2.4
- RAM MOUNT CUP HOLDER 2.9.2.5
- RAM MOUNT CUP HOLDER 2.9.2.6
- BACKPACK & SIDE POUCH 2.9.2.7
- REFLECTOR STICKERS 2.9.2.8
- VISIBILITY FLAG WITH POLE 2.9.2.6

2.10 - HARDWARE

2.10.1 - HARDWARE KIT

- SIGNATURE HARDWARE KITS 2.10.1.1

LEGEND

CURRENT
- These parts and assemblies are currently being produced and delivered.*

SERVICEABLE PARTS
- These parts and assemblies are not currently being produced or delivered on new chairs, but they are available as replacement service parts.*

DISCONTINUED
- These parts and assemblies are no longer being produced or delivered on new chairs, and they are not available as replacement service parts.*

** Please contact Technical Support for information on the replacement parts and assemblies.*

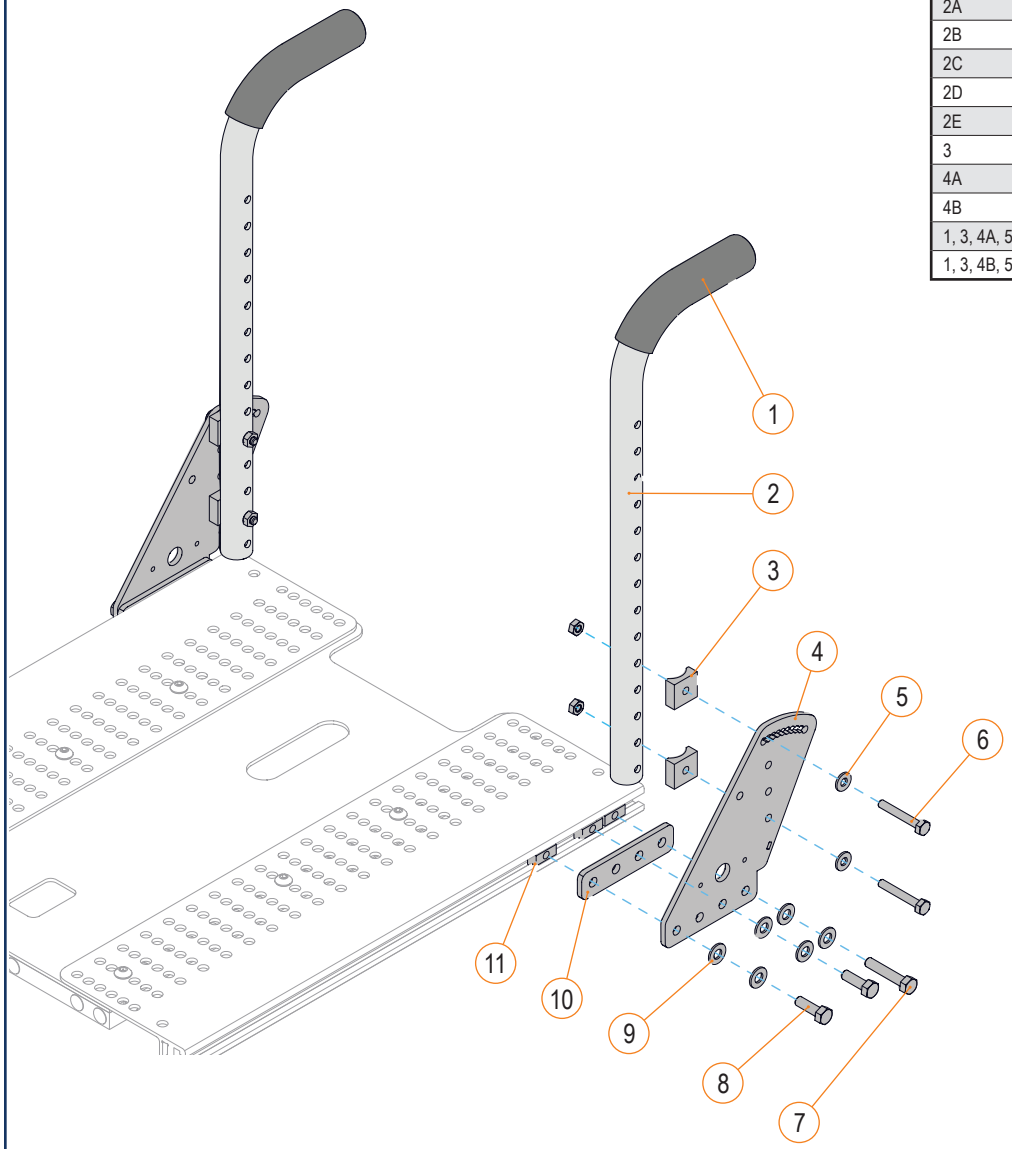

BACK POST ASSEMBLY			
ITEM #	PART #	DESCRIPTION	EFFECTIVE
1	H00063	PUSH HANDLE GRIP	2008-04-30
2A	A93172	CANE F, 255-405 MM (10-16IN) / R , 560-585 MM (22-23IN)	2008-04-30
2B	A93175	CANE F, 455-485 MM (18-19IN) / R , 610 MM (24IN)	2008-04-30
2C	A93173	CANE F, 510-535 MM (20-21IN) / R , 660 MM (26IN)	2008-04-30
2D	A93174	CANE FOR FIXED BACK 560 MM (22IN)	2008-04-30
2E	A9359	CANE FOR FIXED BACK 610 MM (24IN)	2008-04-30
3	A9360	BACK POST SUPPORT	2008-04-30
4A	A93120	STD BACK POST MOUNTING PLATE	2010-04-26
4B	A93122	HD BACK POST MOUNTING PLATE	2010-04-26
1, 3, 4A, 5, 6, 8-11	C-9387	KIT, SUPPORT BRACKETS FOR BACK CANES, FIXED, STD	2008-04-30
1, 3, 4B, 5-11	C-9388	KIT, SUPPORT BRACKETS FOR BACK CANES, FIXED, HD	2008-04-30

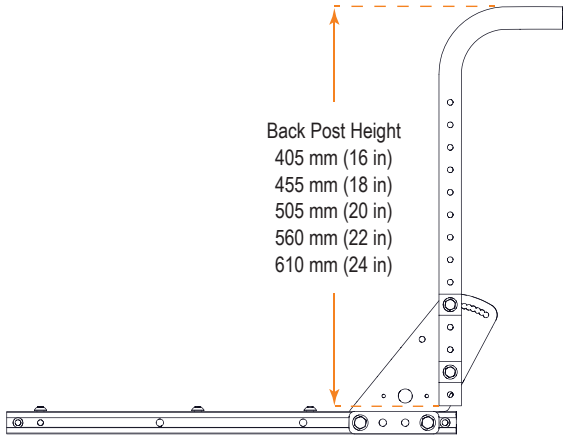

SIGNATURE FIXED BACKREST ASSEMBLY

ITEM #	PART #	DESCRIPTION	EFFECTIVE
1	**1003620**	KIT, PUSH HANDLE FOR SIGNATURE RECLINING BACK, EA	2025-06-26
2A, 3	**1003687**	KIT, BACK CANE ASSY 16-20IN (405-510MM), FIXED, EA	2025-06-26
2B, 3	**1003688**	KIT, BACK CANE ASSY 21-24IN (535-610MM), FIXED, EA	2025-06-26
2C, 3	**1003689**	KIT, BACK CANE ASSY 25-28IN (635-710MM), FIXED, EA	2025-06-26
2A	**1006077**	KIT, BACK CANE EXT. 16-20IN (405-510MM), FIXED, EA	2025-06-26
2B	**1006078**	KIT, BACK CANE EXT. 21-24IN (535-610MM), FIXED, EA	2025-06-26
2C	**1006079**	KIT, BACK CANE EXT. 25-28IN (635-710MM), FIXED, EA	2025-06-26
3	**1006080**	BACK CANE MOUNTING PLATE, FIXED BACK, SIGNATURE,EAS	2025-06-26
4	**1005437**	KIT, SIDE COVER FOR BACK CANE MTG PLATE, FIXED, PR	2025-06-26
5A	**1004388**	KIT, STS REAR REINFORCE. 15-22IN (380-560MM),FIXED	2025-06-26
5B	**1004389**	KIT, STS REAR REINFORCE. 20-28IN (510-710MM),FIXED	2025-06-26

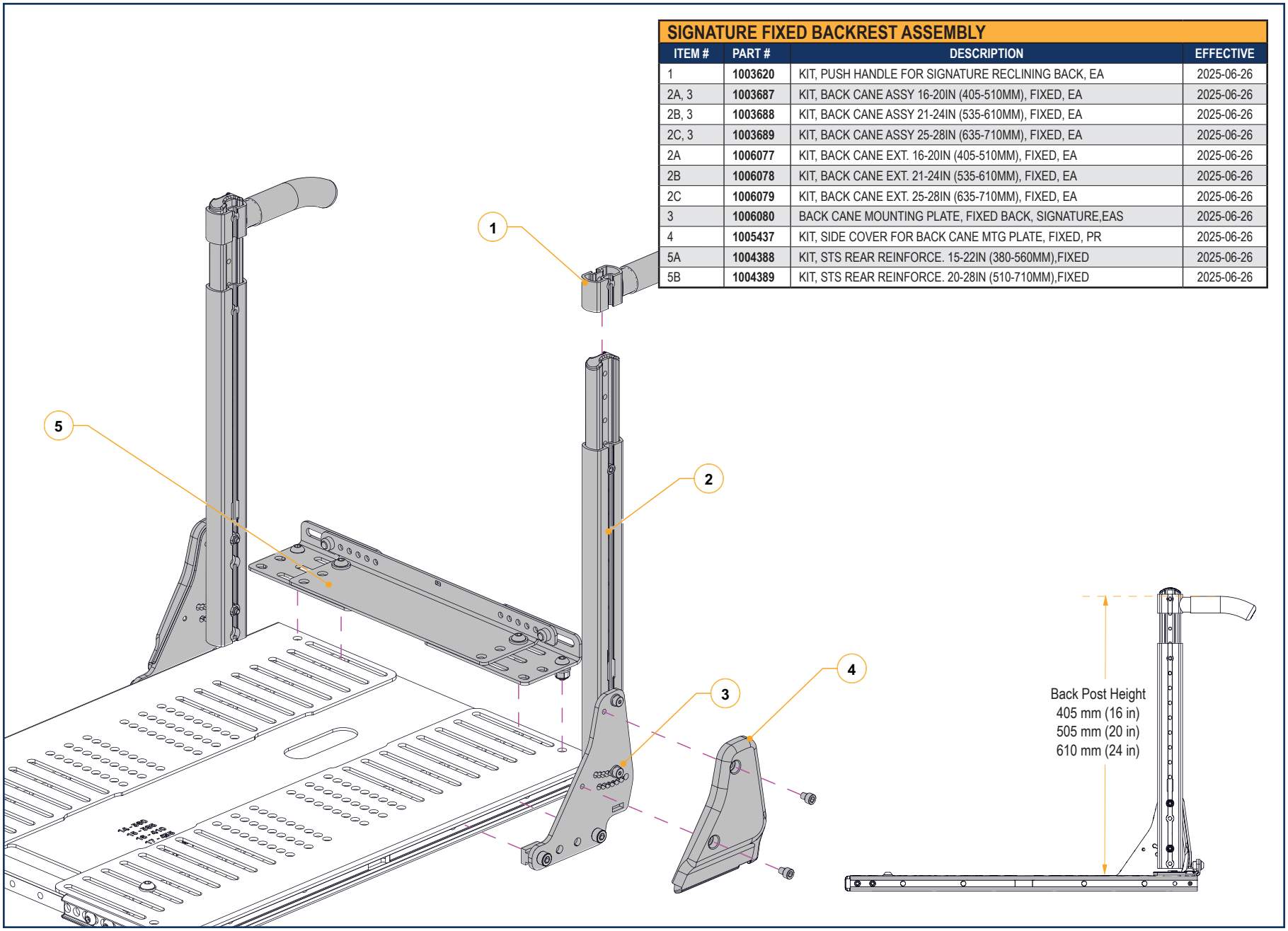

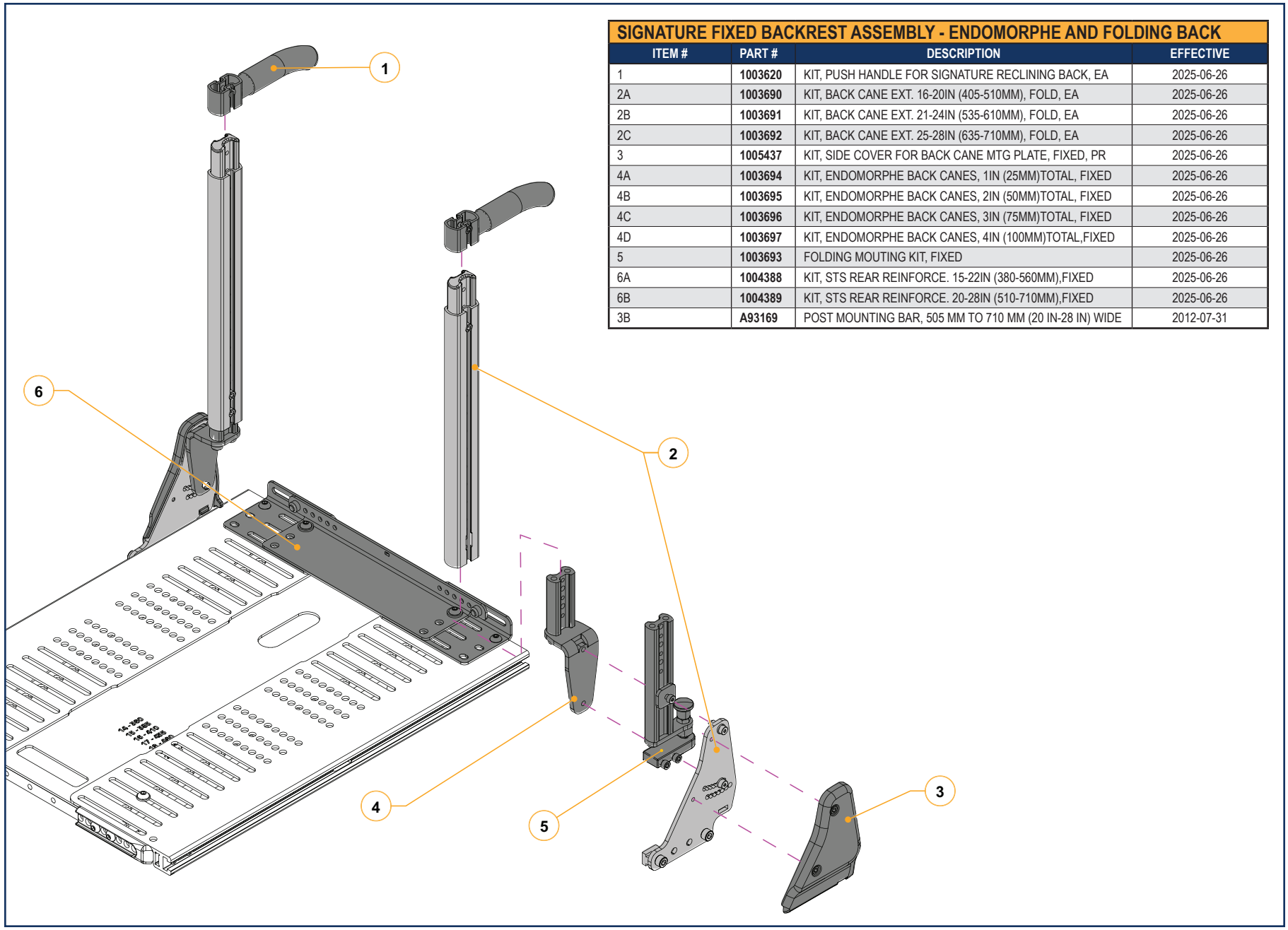

SIGNATURE FIXED BACKREST ASSEMBLY - ENDOMORPHE AND FOLDING BACK			
ITEM #	PART #	DESCRIPTION	EFFECTIVE
1	**1003620**	KIT, PUSH HANDLE FOR SIGNATURE RECLINING BACK, EA	2025-06-26
2A	**1003690**	KIT, BACK CANE EXT. 16-20IN (405-510MM), FOLD, EA	2025-06-26
2B	**1003691**	KIT, BACK CANE EXT. 21-24IN (535-610MM), FOLD, EA	2025-06-26
2C	**1003692**	KIT, BACK CANE EXT. 25-28IN (635-710MM), FOLD, EA	2025-06-26
3	**1005437**	KIT, SIDE COVER FOR BACK CANE MTG PLATE, FIXED, PR	2025-06-26
4A	**1003694**	KIT, ENDOMORPHE BACK CANES, 1IN (25MM)TOTAL, FIXED	2025-06-26
4B	**1003695**	KIT, ENDOMORPHE BACK CANES, 2IN (50MM)TOTAL, FIXED	2025-06-26
4C	**1003696**	KIT, ENDOMORPHE BACK CANES, 3IN (75MM)TOTAL, FIXED	2025-06-26
4D	**1003697**	KIT, ENDOMORPHE BACK CANES, 4IN (100MM)TOTAL,FIXED	2025-06-26
5	**1003693**	FOLDING MOUTING KIT, FIXED	2025-06-26
6A	**1004388**	KIT, STS REAR REINFORCE. 15-22IN (380-560MM),FIXED	2025-06-26
6B	**1004389**	KIT, STS REAR REINFORCE. 20-28IN (510-710MM),FIXED	2025-06-26
3B	**A93169**	POST MOUNTING BAR, 505 MM TO 710 MM (20 IN-28 IN) WIDE	2012-07-31

ELECTRONICS SHROUD FOR PEDIACTRIC FIXED BACK			
ITEM #	PART #	DESCRIPTION	PRIOR TO
1	**A93114**	ELECTRONICS SHROUD COVER	2019-02-12

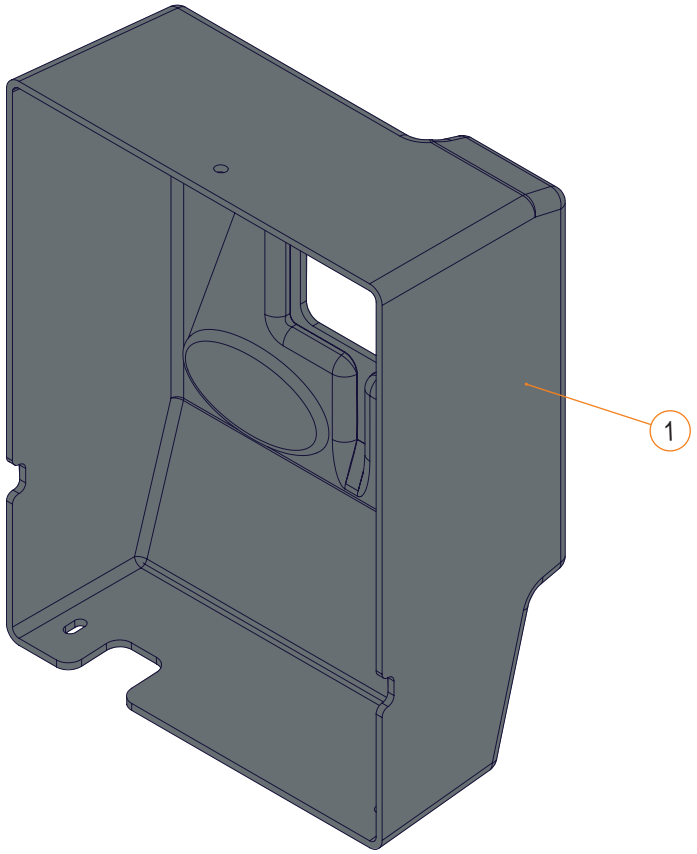

FIXED BACKREST WITH ELECTRONICS SHROUD, OEM BACK			
ITEM #	PART #	DESCRIPTION	EFFECTIVE
1	**S-0150**	ELECTRONICS SHROUD COVER	2012-07-31
3A	**A93167**	POST MOUNTING BAR, 380 MM TO 505 MM (11 IN-20 IN) WIDE	2015-06-08
3B	**A93169**	POST MOUNTING BAR, 505 MM TO 710 MM (20 IN-28 IN) WIDE	2012-07-31
4A	**A93166**	POST MOUNTING BRACKET, 380 MM TO 505 MM (15 IN-20 IN) WIDE	2012-07-31
4B	**A93168**	POST MOUNTING BRACKET, 505 MM TO 710 MM (20 IN-28 IN) WIDE	2012-07-31
1, 2, 3A, 4A, 5-10	**C-9379**	FIXED BACK WITH SHROUD, 380 MM TO 505 MM (15 IN-20 IN) WIDE	2012-07-31
1, 2, 3B, 4B, 5-10	**C-9380**	FIXED BACK WITH SHROUD, 505 MM TO 710 MM (20 IN-28 IN) WIDE	2012-07-31
1, 2, 3A, 4C, 5-10	**S-0151**	FIXED BACK WITH SHROUD, 280 MM TO 405 MM (11 IN-16IN) WIDE	2019-02-12

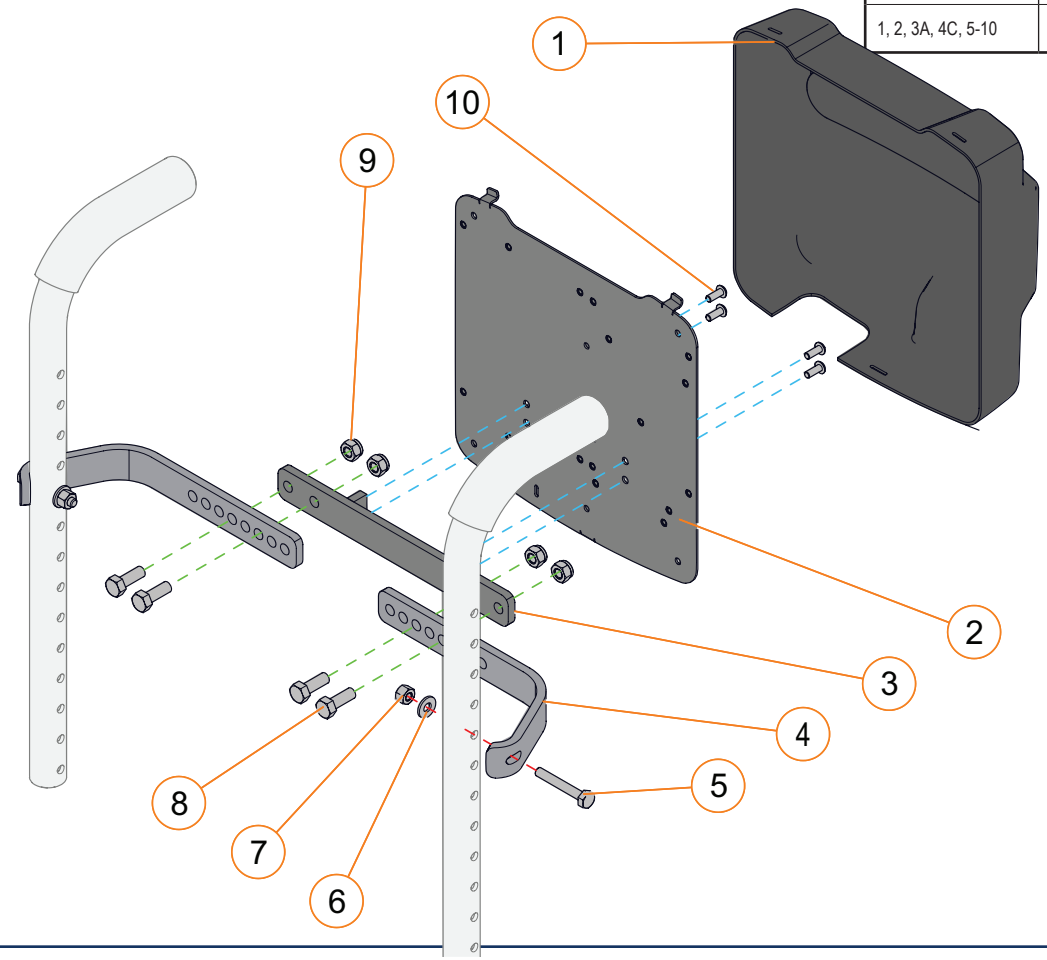

ELECTRONICS SHROUD COVER, SIGNATURE FIXED BACKREST			
ITEM #	PART #	DESCRIPTION	EFFECTIVE
1A	**1004380**	KIT, STS SPREADER BAR W 11-16IN (280-405MM), FIXED	2025-06-26
1B	**1003698**	KIT, STS SPREADER BAR W 14-19IN (355-485MM), FIXED	2025-06-26
1C	**1003699**	KIT, STS SPREADER BAR W 17-22IN (430-560MM), FIXED	2025-06-26
1D	**1004381**	KIT, STS SPREADER BAR W 20-25IN (510-635MM), FIXED	2025-06-26
1E	**1004382**	KIT, STS SPREADER BAR W 23-28IN (585-710MM), FIXED	2025-06-26
2	**1005438**	KIT, SIDE COVER FOR STS SPREADER BAR, FIXED, PR	2025-06-26
3	**1003581**	KIT, ELECTRO. MODULE INSTALL PLATE, STS FIXED BACK	2025-06-26
4	**1003581**	BACK COVER WITH LOGO, FIXED BACKREST	2025-06-26
3-4	**1005507**	ELECTRONICS SHROUD COVER, SIGNATURE FIXED BACKREST	2025-06-26

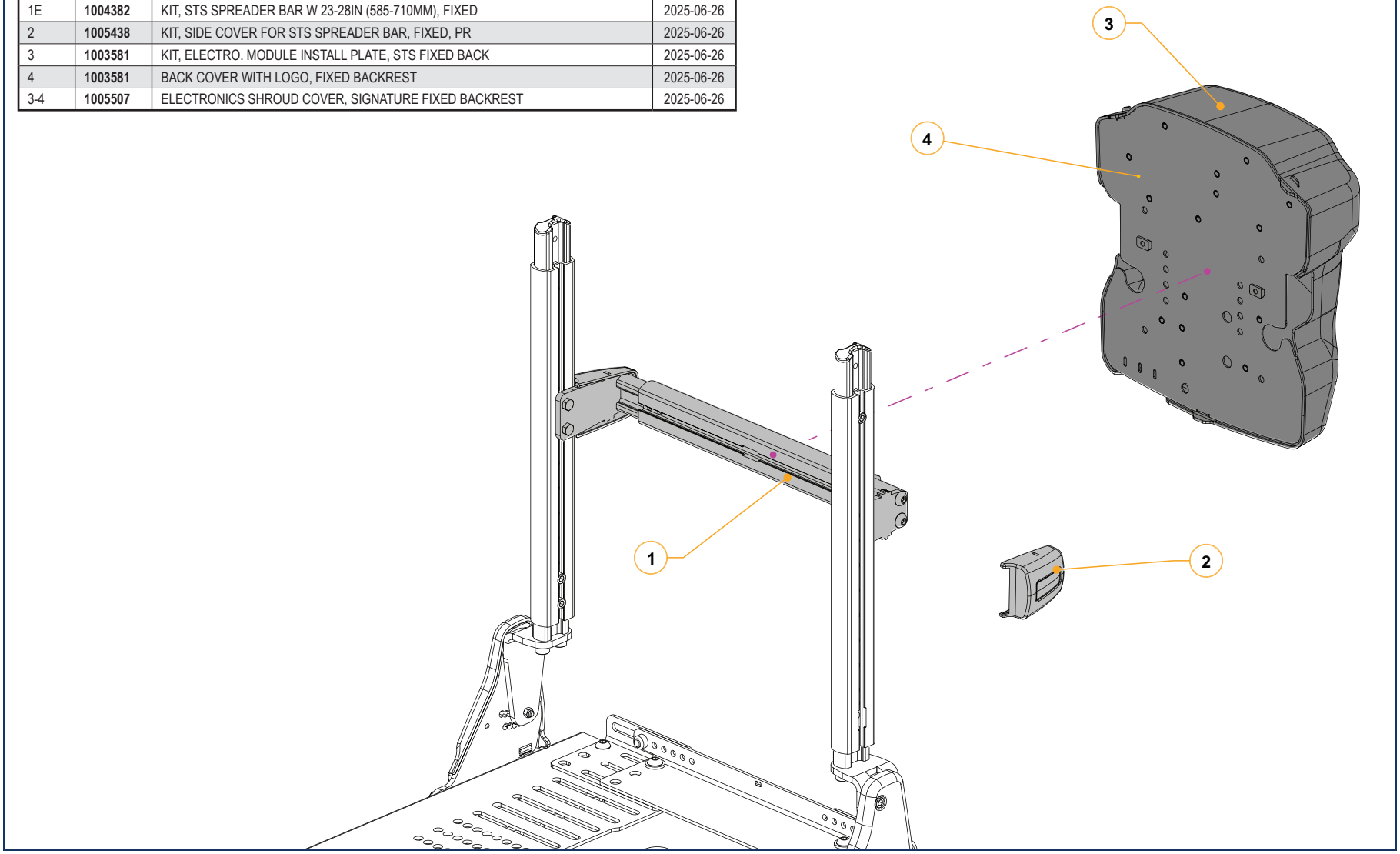

FIXED BACKREST WITH ELECTRONICS SHROUD, NXT OPTIMA AND OEM BACK			
ITEM #	PART #	DESCRIPTION	EFFECTIVE
1A	C-9390	SPREADER BAR, 280 MM TO 405 MM (11 IN-16 IN) WIDE	2015-06-08
1B	C-9391	SPREADER BAR, 380 MM TO 505 MM (15 IN-20 IN) WIDE	2015-06-08
1C	C-9392	SPREADER BAR, 480 MM TO 610 MM (19 IN-24 IN) WIDE	2015-06-08
1D	C-9393	SPREADER BAR, 610 MM TO 710 MM (24 IN-28 IN) WIDE	2015-06-08
2	A93163	ELECTRONICS SHROUD COVER	2015-06-08
2-10	C-9396	ELECTRONICS SHROUD, NXT OPTIMA	2015-06-08

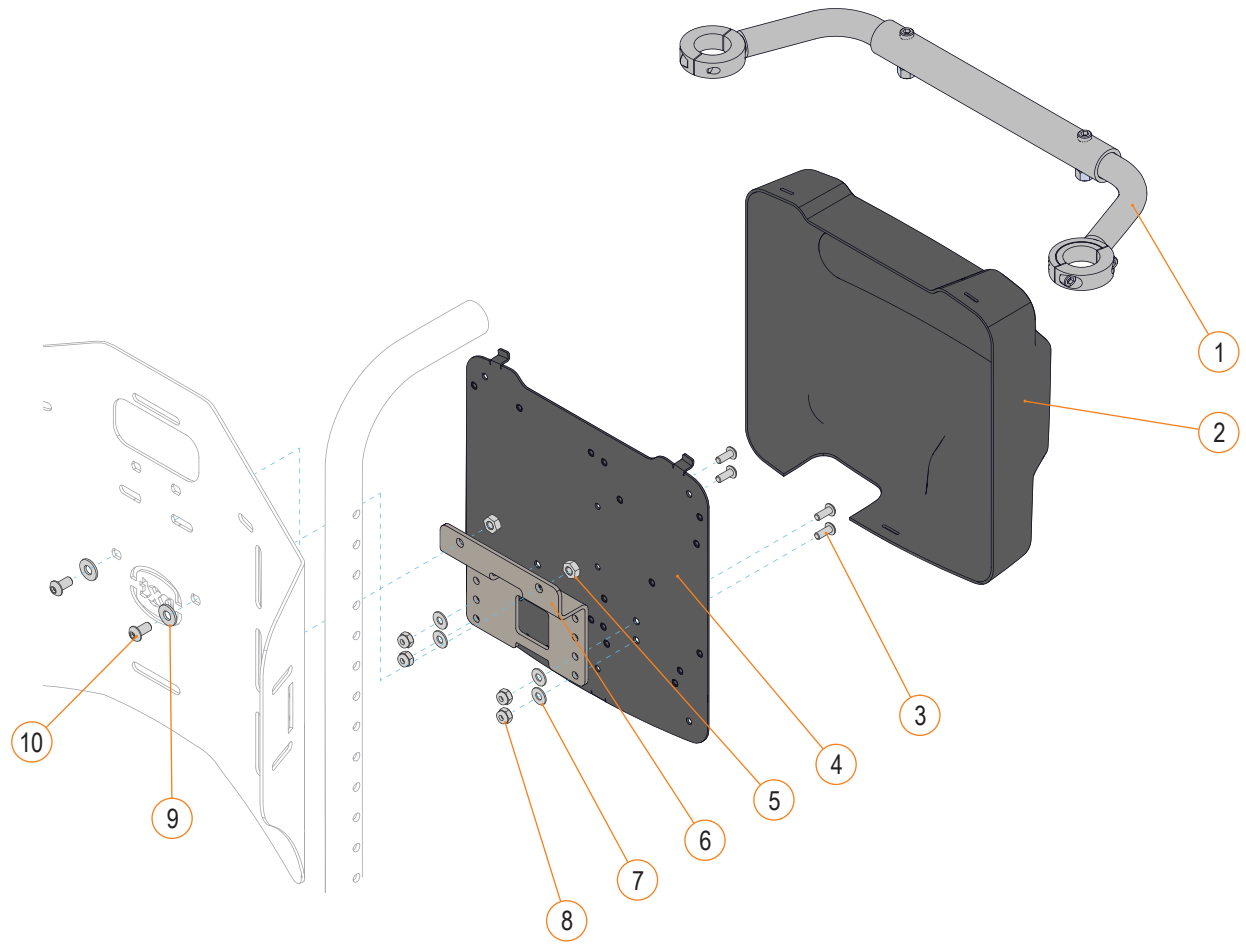

FIXED BACKREST WITH ELECTRONICS SHROUD, FOR OEM BACK			
ITEM #	PART #	DESCRIPTION	EFFECTIVE
1A	C-9390	SPREADER BAR, 280 MM TO 405 MM (11 IN-16 IN) WIDE	2015-06-08
1B	C-9391	SPREADER BAR, 380 MM TO 505 MM (15 IN-20 IN) WIDE	2015-06-08
1C	C-9392	SPREADER BAR, 480 MM TO 610 MM (19 IN-24 IN) WIDE	2015-06-08
1D	C-9393	SPREADER BAR, 610 MM TO 710 MM (24 IN-28 IN) WIDE	2015-06-08
2	A93163	ELECTRONICS SHROUD COVER	2015-06-08
2-9	C-9396	ELECTRONICS SHROUD, NXT OPTIMA AND STD BACK	2015-06-08

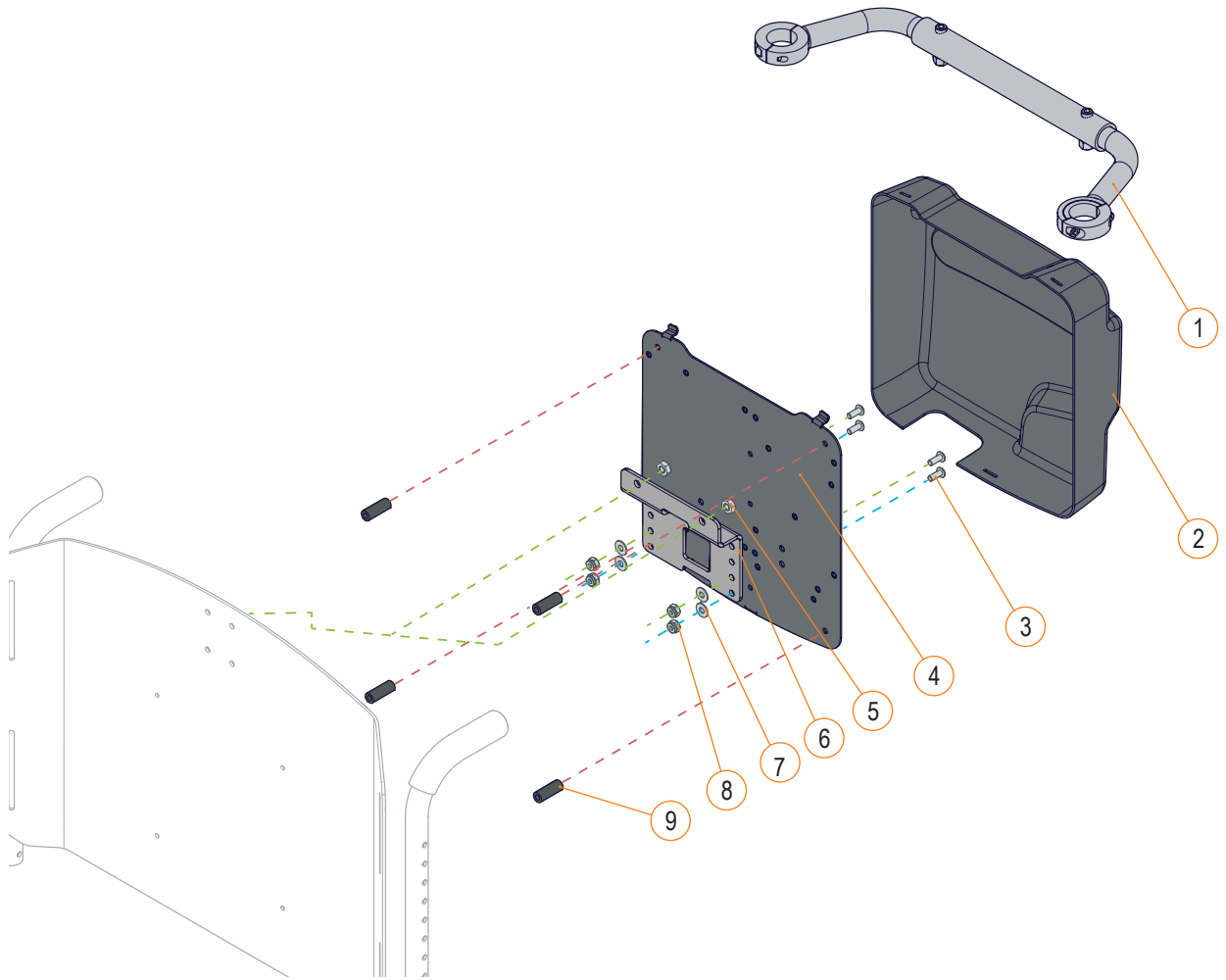

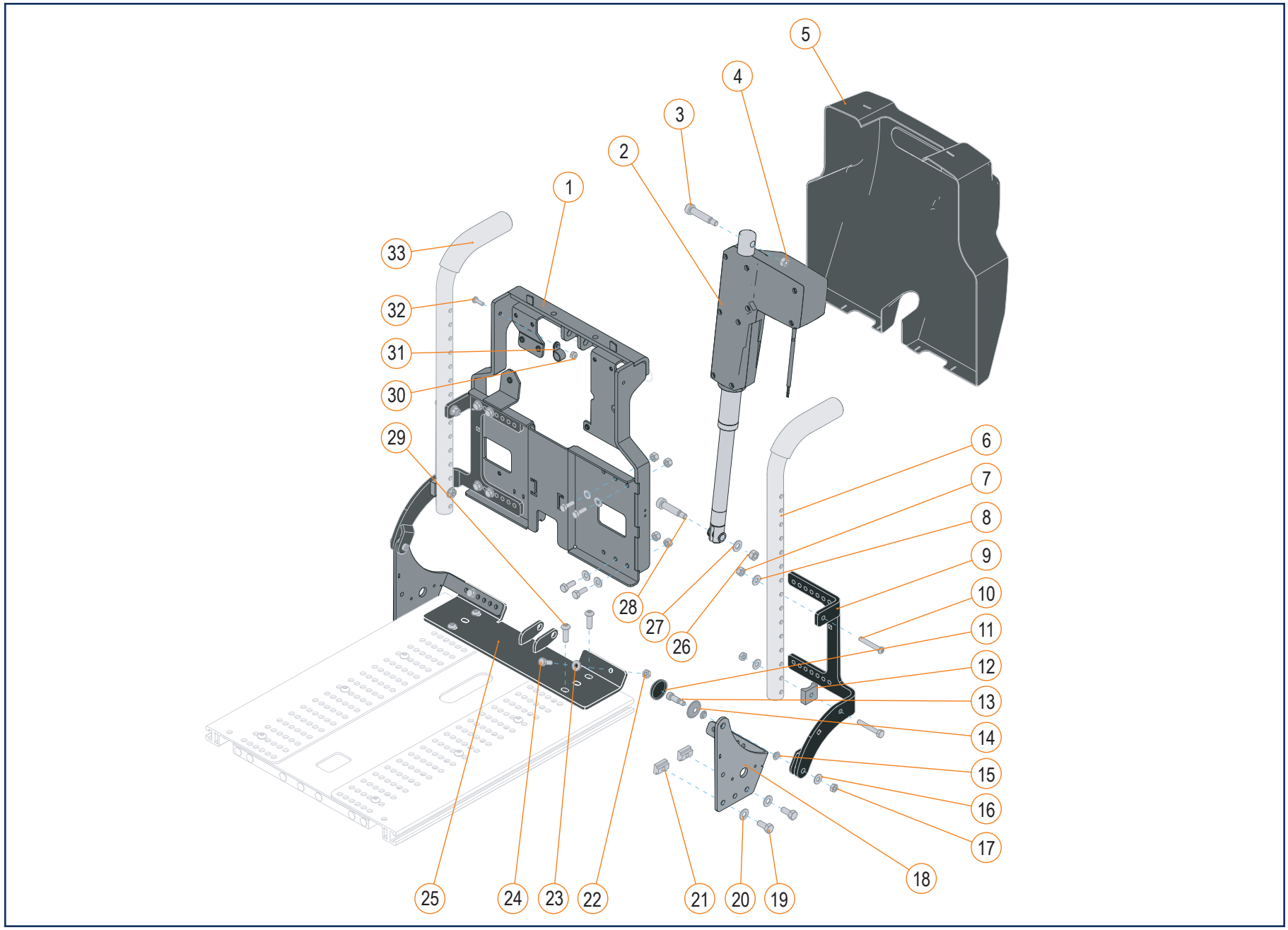
1
2
3
4
5
6
7
8
9
10
11
12
13
14
15
16
17
18
19
20
21
22
23
24
25
26
27
28
29
30
31
32
33

2.1.2.1 A

POWER RECLINING BACKREST

ITEM #	PART #	DESCRIPTION	EFFECTIVE
2	R00041	ACTUATOR, STROKE, 168 MM 4000N	2020-02-03
3	E00456	SHOULDER BOLT, M10 X 40 MM	2020-02-03
4	E00211	M8 NYLON INSERT LOCK NUT	2020-02-03
5	A93158	ELECTRONICS SHROUD COVER	2020-02-03
6A	A93172	CANE F, 255-405 MM (10-16IN) / R , 560-585 MM (22-23IN)	2020-02-03
6B	A93175	CANE F, 455-485 MM (18-19IN) / R , 610 MM (24IN)	2020-02-03
6C	A93173	CANE F, 510-535 MM (20-21IN) / R , 660 MM (26IN)	2020-02-03
9A	A93156	BACK POST SUPPORT PIVOT, LEFT HAND, 380 MM TO 505 MM (15 IN-20 IN) W	2020-02-03
9B	A93155	BACK POST SUPPORT PIVOT, RIGHT HAND, 380 MM TO 505 MM (15 IN-20 IN) W	2020-02-03
9C	A93161	BACK POST SUPPORT PIVOT, LEFT HAND, 480 MM TO 610 MM (19 IN-24 IN) W	2020-02-03
9D	A93160	BACK POST SUPPORT PIVOT, RIGHT HAND, 480 MM TO 610 MM (19 IN-24 IN) W	2020-02-03
9E	39160-A02	BACK POST SUPPORT PIVOT, LH, 610-710MM (24”-28”) W	2021-02-04
9F	39160-A03	BACK POST SUPPORT PIVOT, RH, 610-710MM (24”-28”) W	2021-02-04
9G	39160-A09	BACK POST SUPPORT PIVOT, LH, 480-610MM (19”-24”) W	2021-12-13
9H	39160-A08	BACK POST SUPPORT PIVOT, RH, 480-610MM (19-24”) W	2021-12-13
9I	43484-A01	BACK POST SUPPORT RECL, 19-24IN W, LH, CANTILEVER	2022-03-31
9J	43484-A02	BACK POST SUPPORT RECL, 19-24IN W, RH, CANTILEVER	2022-03-31
9K	43484-A03	BACK POST SUPPORT RECL, 15-20IN W, RH, CANTI, 18+	2022-03-31
9L	43484-A04	BACK POST SUPPORT RECL, 15-20IN W, LH, CANTI, 18+	2022-03-31
9M	43484-A05	BACK POST SUPPORT RECL, 15-20IN W, RH, CANTI, 17-	2022-03-31
9N	43484-A06	BACK POST SUPPORT RECL, 15-20IN W, LH, CANTI, 17-	2022-03-31
9O	43484-A08	BACK POST SUPPORT RECL, 24-28IN W, RH, CANTILEVER	2022-03-31
9P	43484-A09	BACK POST SUPPORT RECL, 24-28IN W, LH, CANTILEVER	2022-03-31
18A	A93154	SIDE MOUNTING BRACKET, LEFT HAND	2015-01-15
18B	A93153	SIDE MOUNTING BRACKET, RIGHT HAND	2015-01-15
18C	39160-A04	SIDE MOUNTING BRACKET, RH, 610-710 MM (24-28”) VHD	2021-02-04
18D	39160-A05	SIDE MOUNTING BRACKET, LH, 610-710 MM (24-28”) VHD	2021-02-04
18E	39160-A07	SIDE MOUNTING BRACKET, LH, 480-610 MM (19-24”) VHD	2021-12-13
18F	39160-A06	SIDE MOUNTING BRACKET, RH, 480-610 MM (19-24”) VHD	2021-12-13

ITEM #	PART #	DESCRIPTION	EFFECTIVE
25A	A93152	ACTUATOR LOWER SUPPORT, 380 MM TO 505 MM (15 IN-20 IN) WIDE	2015-01-15
25B	A93159	ACTUATOR LOWER SUPPORT, 480 MM TO 610 MM (19 IN-24 IN) WIDE	2015-01-15
25C	39160-A01	ACTUATOR LOWER SUPPORT, 610-710 MM (24”-28”) WIDE	2021-02-04
25D	39160-A10	ACTUATOR LOWER SUPPORT, 480-610 MM (19”-24”) WIDE	2021-12-13
26	E00211	M8 NYLON INSERT LOCK NUT	2020-02-03
27	E00041	5/16 IN FLAT WASHER	2020-02-03
28	E00440	SHOULDER BOLT M10 X 35 MM	2020-02-03
33	H00063	PUSH HANDLE GRIP	2020-02-03
7, 8, 9A, 9B, 10-17	S-0038	BACK POST SUPPORT PIVOT KIT, 380 MM TO 505 MM (15 IN-20 IN) WIDE	2020-02-03
7, 8, 9C, 9D, 10-17	S-0037	BACK POST SUPPORT PIVOT KIT, 480 MM TO 610 MM (19 IN-24 IN) WIDE	2020-02-03
11, 13-17	S-0096	RECLINE PIVOT HARDWARE KIT	2020-02-03
1-5, 7, 8, 9A, 9B 10-17, 18A, 18B, 19-24, 25A, 26-33	1001421	POWER RECLINING BACK, 380 MM TO 505 MM (15 IN-20 IN) WIDE	2020-02-03
1-5, 7, 8, 9C, 9D 10-17, 18A, 18B 19-24, 25B, 26-33	1001422	POWER RECLINING BACK, 480 MM TO 610 MM (19 IN-24 IN) WIDE	2020-02-03
1-5, 7, 8, 9E, 9F 10-17, 18C, 18D 19-24, 25C, 26-33	S-39160-01	VHD POWER RECLINE, 610-710 MM (24-28IN) WIDE	2021-02-19
1-5, 7, 8, 9E, 9F 10-17, 18E, 18F 19-24, 25D, 26-33	S-39160-03	VHD POWER RECLINING BACK, 19-24IN WIDE	2021-12-22
1-5, 7, 8, 9K, 9L 10-17, 18E, 18F 19-24, 25D, 26-33	S-43484-SOAFB-R-18/20	PWR RECLINING BACK, 15-20IN WIDE, CANTILEVER, 18+W	2022-03-31
1-5, 7, 8, 9M, 9N 10-17, 18E, 18F 19-24, 25D, 26-33	S-43484-SOAFB-R-15/17	PWR RECLINING BACK, 15-20IN WIDE, CANTILEVER, 17-W	2022-03-31
1-5, 7, 8, 9I, 9J 10-17, 18E, 18F 19-24, 25D, 26-33	S-43484-SOAFB-R-19/24	PWR RECLINING BACK, 19-24IN WIDE, CANTILEVER	2022-03-31
1-5, 7, 8, 9O, 9P 10-17, 18E, 18F 19-24, 25D, 26-33	S-43484-SOAFB-R-24/28	VHD POWER RECLINING BACK, 24-28IN WIDE, CANTILEVER	2022-03-31

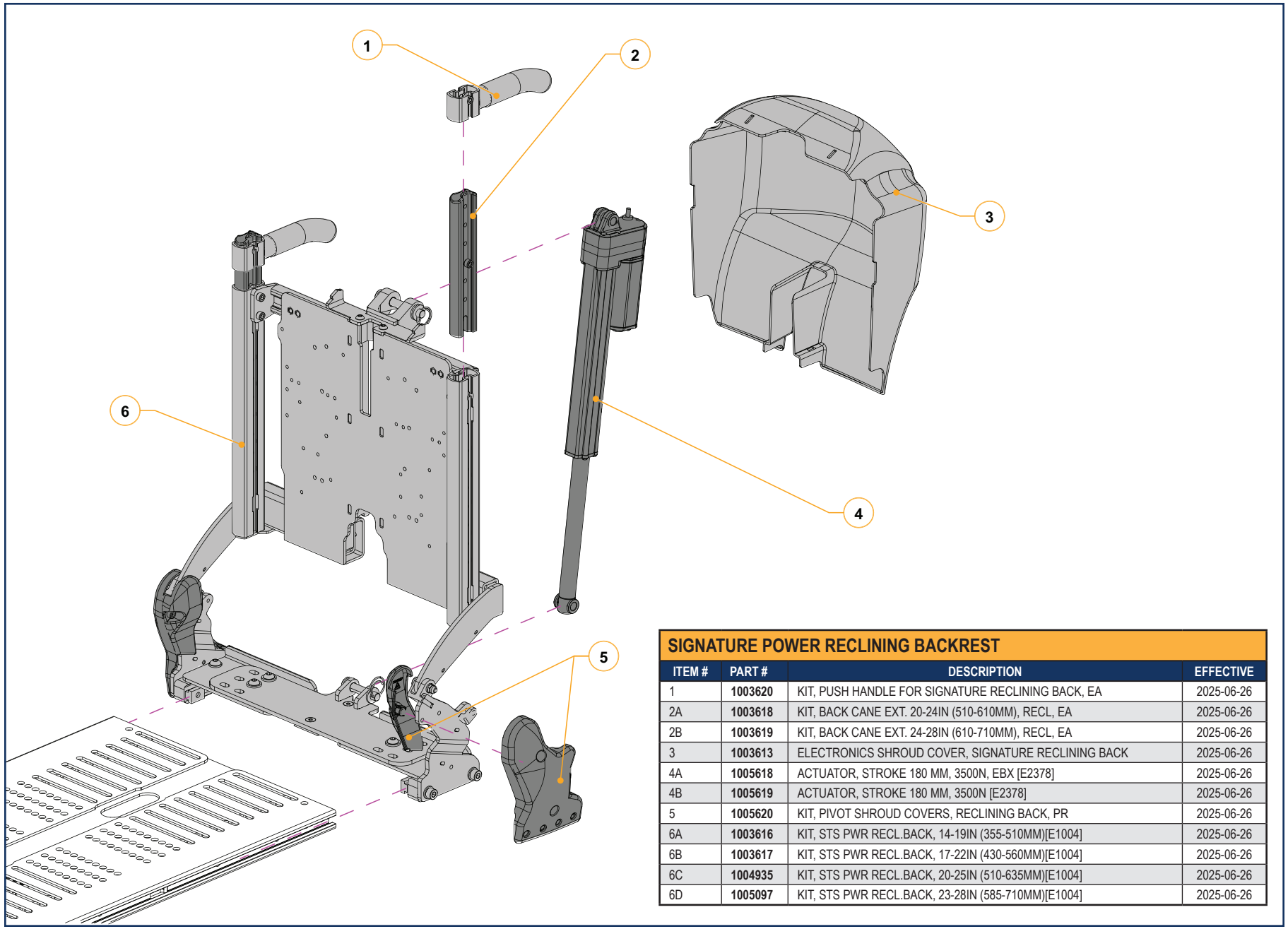

SIGNATURE POWER RECLINING BACKREST

ITEM #	PART #	DESCRIPTION	EFFECTIVE
1	**1003620**	KIT, PUSH HANDLE FOR SIGNATURE RECLINING BACK, EA	2025-06-26
2A	**1003618**	KIT, BACK CANE EXT. 20-24IN (510-610MM), RECL, EA	2025-06-26
2B	**1003619**	KIT, BACK CANE EXT. 24-28IN (610-710MM), RECL, EA	2025-06-26
3	**1003613**	ELECTRONICS SHROUD COVER, SIGNATURE RECLINING BACK	2025-06-26
4A	**1005618**	ACTUATOR, STROKE 180 MM, 3500N, EBX [E2378]	2025-06-26
4B	**1005619**	ACTUATOR, STROKE 180 MM, 3500N [E2378]	2025-06-26
5	**1005620**	KIT, PIVOT SHROUD COVERS, RECLINING BACK, PR	2025-06-26
6A	**1003616**	KIT, STS PWR RECL.BACK, 14-19IN (355-510MM)[E1004]	2025-06-26
6B	**1003617**	KIT, STS PWR RECL.BACK, 17-22IN (430-560MM)[E1004]	2025-06-26
6C	**1004935**	KIT, STS PWR RECL.BACK, 20-25IN (510-635MM)[E1004]	2025-06-26
6D	**1005097**	KIT, STS PWR RECL.BACK, 23-28IN (585-710MM)[E1004]	2025-06-26

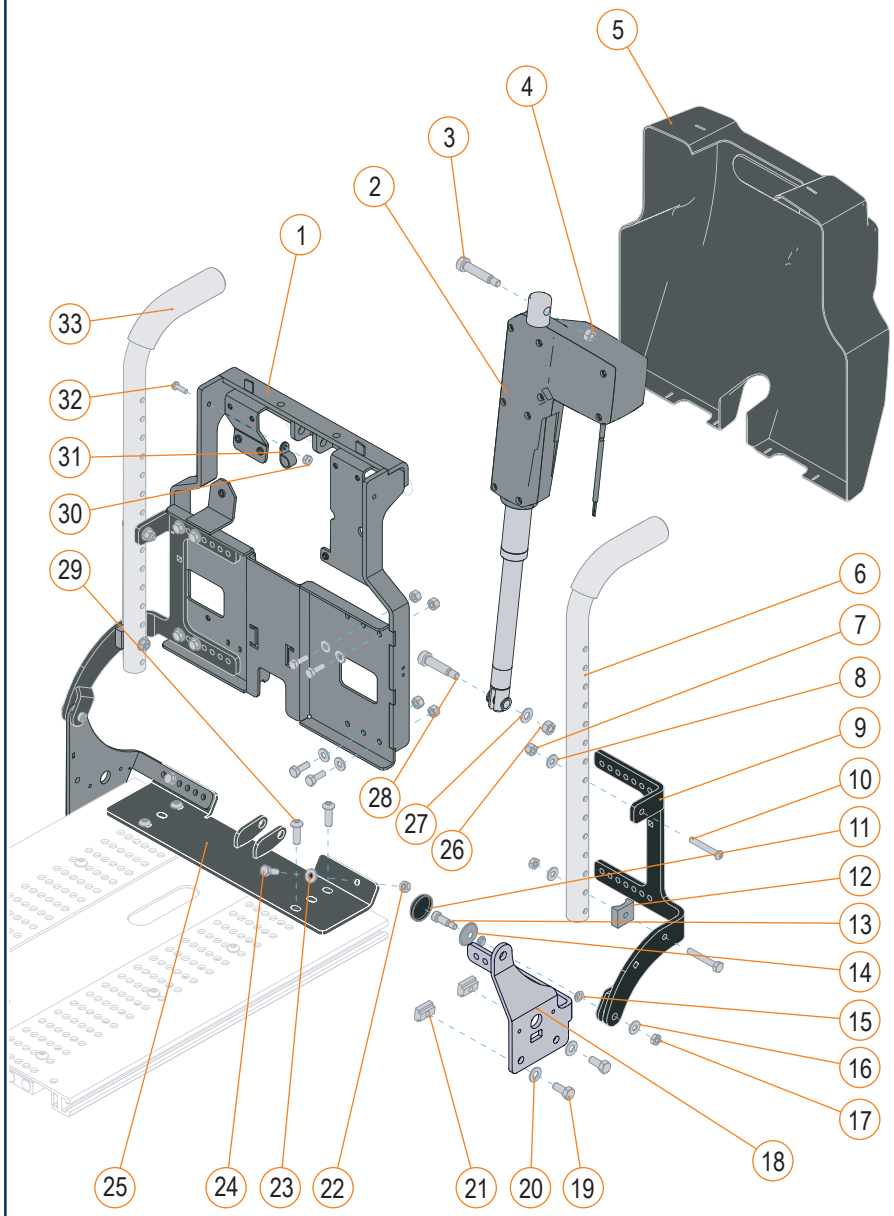

POWER RECLINING BACKREST FOR ASCENT POWER STANDING MODULE			
ITEM #	PART #	DESCRIPTION	EFFECTIVE
2-4, 26-28	**S-0220**	ACTUATOR, STROKE, 168 MM 4000N, EBX	2019-09-30
5	**A93158**	ELECTRONICS SHROUD COVER	2008-04-30
6A	**A93172**	CANE F, 255-405 MM (10-16IN) / R , 560-585 MM (22-23IN)	2016-03-18
6B	**A93175**	CANE F, 455-485 MM (18-19IN) / R , 610 MM (24IN)	2016-03-18
6C	**A93173**	CANE F, 510-535 MM (20-21IN) / R , 660 MM (26IN)	2016-03-18
9A	**A93156**	BACK POST SUPPORT PIVOT, LEFT HAND, 380 MM TO 505 MM (15 IN-20 IN) WIDE	2008-04-30
9B	**A93155**	BACK POST SUPPORT PIVOT, RIGHT HAND, 380 MM TO 505 MM (15 IN-20 IN) WIDE	2015-01-15
9C	**A93161**	BACK POST SUPPORT PIVOT, LEFT HAND, 480 MM TO 610 MM (19 IN-24 IN) WIDE	2019-09-30
9D	**A93160**	BACK POST SUPPORT PIVOT, RIGHT HAND, 480 MM TO 610 MM (19 IN-24 IN) WIDE	2019-09-30
18A	**1001104**	BRACKET BENT, MOUNTING BRACKET, LEFT, RECL BACK	2020-08-15
18B	**1001103**	BRACKET BENT, MOUNTING BRACKET, RIGHT, RECL BACK	2020-08-15
25A	**1001013**	ACTUATOR LOWER SUPPORT, 380 MM TO 505 MM (15 IN-20 IN) WIDE	2019-09-30
25B	**1001005**	ACTUATOR LOWER SUPPORT, 480 MM TO 610 MM (19 IN-24 IN) WIDE	2019-09-30
33	**H00063**	PUSH HANDLE GRIP	2011-10-31
7, 8, 9A, 9B, 10-17	**S-0038**	BACK POST SUPPORT PIVOT KIT, 380 MM TO 505 MM (15 IN-20 IN) WIDE	2008-04-30
7, 8, 9C, 9D, 10-17	**S-0223**	BACK POST SUPPORT PIVOT KIT, 480 MM TO 610 MM (19 IN-24 IN) WIDE	2019-09-30
11, 13-17	**S-0096**	RECLINE PIVOT HARDWARE KIT	2015-03-11
1-5, 7, 8, 9A, 9B 10-17, 18A, 18B, 19-24, 25A, 26-33	**S-0224**	PWR RECLINE FOR STANDER, 380 MM TO-505 MM (15 IN-20 IN) WIDE	2019-09-30
1-5, 7, 8, 9C, 9D 10-17, 18A, 18B 19-24, 25B, 26-33	**S-0225**	PWR RECLINE FOR STANDER, 480 MM-610 MM (19 IN-24 IN) WIDE	2019-09-30

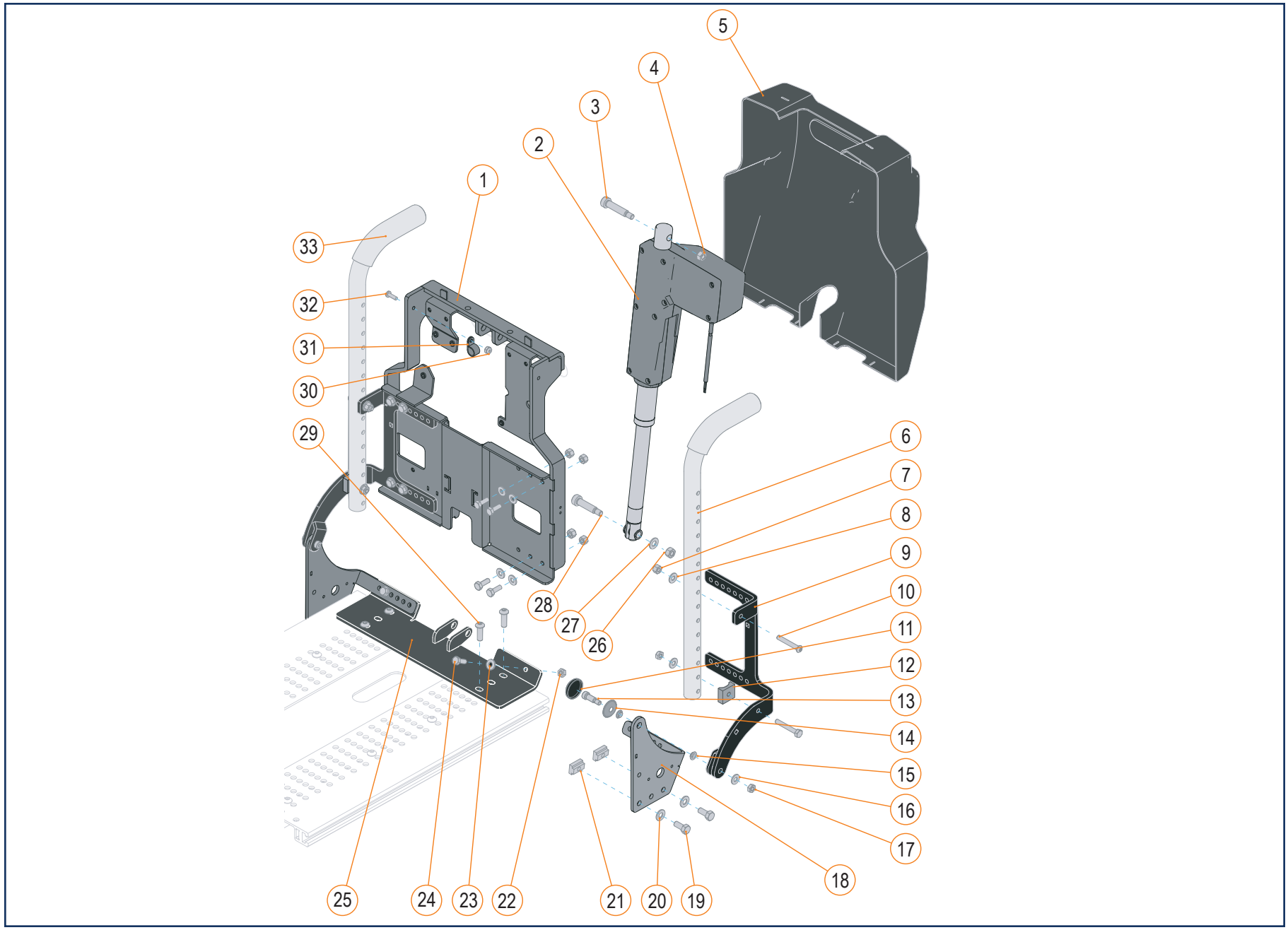
1
2
3
4
5
6
7
8
9
10
11
12
13
14
15
16
17
18
19
20
21
22
23
24
25
26
27
28
29
30
31
32
33

POWER RECLINING BACKREST, E-BX

ITEM #	PART #	DESCRIPTION	EFFECTIVE
5	A93158	ELECTRONICS SHROUD COVER	2008-04-30
6A	A93172	CANE F, 255-405 MM (10-16IN) / R , 560-585 MM (22-23IN)	2014-12-24
6B	A93175	CANE F, 455-485 MM (18-19IN) / R , 610 MM (24IN)	2008-04-30
6C	A93173	CANE F, 510-535 MM (20-21IN) / R , 660 MM (26IN)	2008-04-30
9A	A93156	BACK POST SUPPORT PIVOT, LEFT HAND, 380 MM TO 505 MM (15 IN-20 IN) W	2008-04-30
9B	A93155	BACK POST SUPPORT PIVOT, RIGHT HAND, 380 MM TO 505 MM (15 IN-20 IN) W	2015-01-15
9C	A93161	BACK POST SUPPORT PIVOT, LEFT HAND, 480 MM TO 610 MM (19 IN-24 IN) W	2015-01-15
9D	A93160	BACK POST SUPPORT PIVOT, RIGHT HAND, 480 MM TO 610 MM (19 IN-24 IN) W	2015-01-15
9E	39160-A02	BACK POST SUPPORT PIVOT, LH, 610-710MM (24”-28”) W	2021-02-04
9F	39160-A03	BACK POST SUPPORT PIVOT, RH, 610-710MM (24”-28”) W	2021-02-04
9G	39160-A09	BACK POST SUPPORT PIVOT, LH, 480-610MM (19”-24”) W	2021-12-13
9H	39160-A08	BACK POST SUPPORT PIVOT, RH, 480-610MM (19-24”) W	2021-12-13
9I	43484-A01	BACK POST SUPPORT RECL, 19-24IN W, LH, CANTILEVER	2022-03-31
9J	43484-A02	BACK POST SUPPORT RECL, 19-24IN W, RH, CANTILEVER	2022-03-31
9K	43484-A03	BACK POST SUPPORT PIVOT, RH, 380-505MM (15”-20”) W	2022-03-31
9L	43484-A04	BACK POST SUPPORT RECL, 15-20IN W, LH, CANTI, 18+	2022-03-31
9M	43484-A05	BACK POST SUPPORT RECL, 15-20IN W, RH, CANTI, 17-	2022-03-31
9N	43484-A06	BACK POST SUPPORT RECL, 15-20IN W, LH, CANTI, 17-	2022-03-31
9O	43484-A08	BACK POST SUPPORT RECL, 24-28IN W, RH, CANTILEVER	2022-03-31
9P	43484-A09	BACK POST SUPPORT RECL, 24-28IN W, LH, CANTILEVER	2022-03-31
18A	A93154	SIDE MOUNTING BRACKET, LEFT HAND	2015-01-15
18B	A93153	SIDE MOUNTING BRACKET, RIGHT HAND	2015-01-15
18C	39160-A04	SIDE MOUNTING BRACKET, RH, 610-710 MM (24-28”) VHD	2021-02-04
18D	39160-A05	SIDE MOUNTING BRACKET, LH, 610-710 MM (24-28”) VHD	2021-02-04
18E	39160-A07	SIDE MOUNTING BRACKET, LH, 480-610 MM (19-24”) VHD	2021-12-13
18F	39160-A06	SIDE MOUNTING BRACKET, RH, 480-610 MM (19-24”) VHD	2021-12-13
25A	A93152	ACTUATOR LOWER SUPPORT, 380 MM TO 505 MM (15 IN-20 IN) WIDE	2015-01-15
25B	A93159	ACTUATOR LOWER SUPPORT, 480 MM TO 610 MM (19 IN-24 IN) WIDE	2015-01-15
25C	39160-A01	ACTUATOR LOWER SUPPORT, 610-710 MM (24”-28”) WIDE	2021-02-04
25D	39160-A10	ACTUATOR LOWER SUPPORT, 480-610 MM (19”-24”) WIDE	2021-12-13
33	H00063	PUSH HANDLE GRIP	2011-10-31

ITEM #	PART #	DESCRIPTION	EFFECTIVE
7, 8, 9A, 9B, 10-17	S-0038	BACK POST SUPPORT PIVOT KIT, 380 MM TO 505 MM (15 IN-20 IN) WIDE	2008-04-30
7, 8, 9C, 9D, 10-17	S-0037	BACK POST SUPPORT PIVOT KIT, 480 MM TO 610 MM (19 IN-24 IN) WIDE	2015-03-11
11, 13-17	S-0096	RECLINE PIVOT HARDWARE KIT	2015-03-11
2-4, 26-28	S-0220	IQ ACTUATOR RECLINE, STROKE 168 MM 4000N	2020-02-03
1-5, 7, 8, 9A,9B, 10-17, 18A, 18B 19-24, 25A, 26-33	1001903	POWER RECLINE IQ ACT, 380 MM TO 505 MM (15 IN-20 IN) WIDE	2020-11-16
1-5, 7, 8, 9C, 9D, 10-17, 18A, 18B 19-24, 25B, 26-33	1001904	POWER RECLINE IQ ACT, 480 MM TO 610 MM (19 IN-24 IN) WIDE	2020-11-16
1-5, 7, 8, 9E, 9F, 10-17, 18C, 18D, 19-24, 25C, 26-33	S-39160-02	VHD PWR RECLINE IQ ACT, 610-710 MM (24-28IN) WIDE	2021-02-19
1-5, 7, 8, 9E, 9F, 10-17, 18E, 18F 19-24, 25D, 26-33	S-39160-04	VHD POWER RECLINING BACK, EBX, 19-24IN WIDE	2021-12-22
1-5, 7, 8, 9K, 9L, 10-17, 18A, 18B 19-24, 25A, 26-33	S-43484-SOAFB-EBX-R-18/20	PWR RECLINING BACK EBX, 15-20IN WIDE, CANTIL, 18+W	2022-03-31
1,-5, 7, 8, 9M, 9N, 10-17, 18A, 18B 19-24, 25A, 26-33	S-43484-SOAFB-EBX-R-15/17	PWR RECLINING BACK EBX, 15-20IN WIDE, CANTIL, 17-W	2022-03-31
1-5, 7, 8, 9I, 9J, 10-17, 18A, 18B 19-24, 25B, 26-33	S-43484-SOAFB-R-19/24-EBX	PWR RECLINING BACK, EBX, 19-24IN WIDE, CANTILEVER	2022-03-31
1-5, 7, 8, 9O, 9P, 10-17, 18C, 18D, 19-24, 25C, 26-33	S-43484-SOAFB-R-24/28-EBX	VHD PWR RECLINING BACK, EBX, 24-28IN W, CANTILEVER	2022-03-31

PEDIATRIC SEAT PAN			
ITEM #	PART #	DESCRIPTION	PRIOR TO
1-6	C-9547	PEDIATRIC SEAT PAN, 280 MM TO 405 MM (11 IN-16 IN) WIDE	2024-06-15
7-9	C-9548	PEDIATRIC SEAT REINFORCEMENT, 380 MM TO 405 MM (15 IN-16 IN) WIDE	2024-06-15

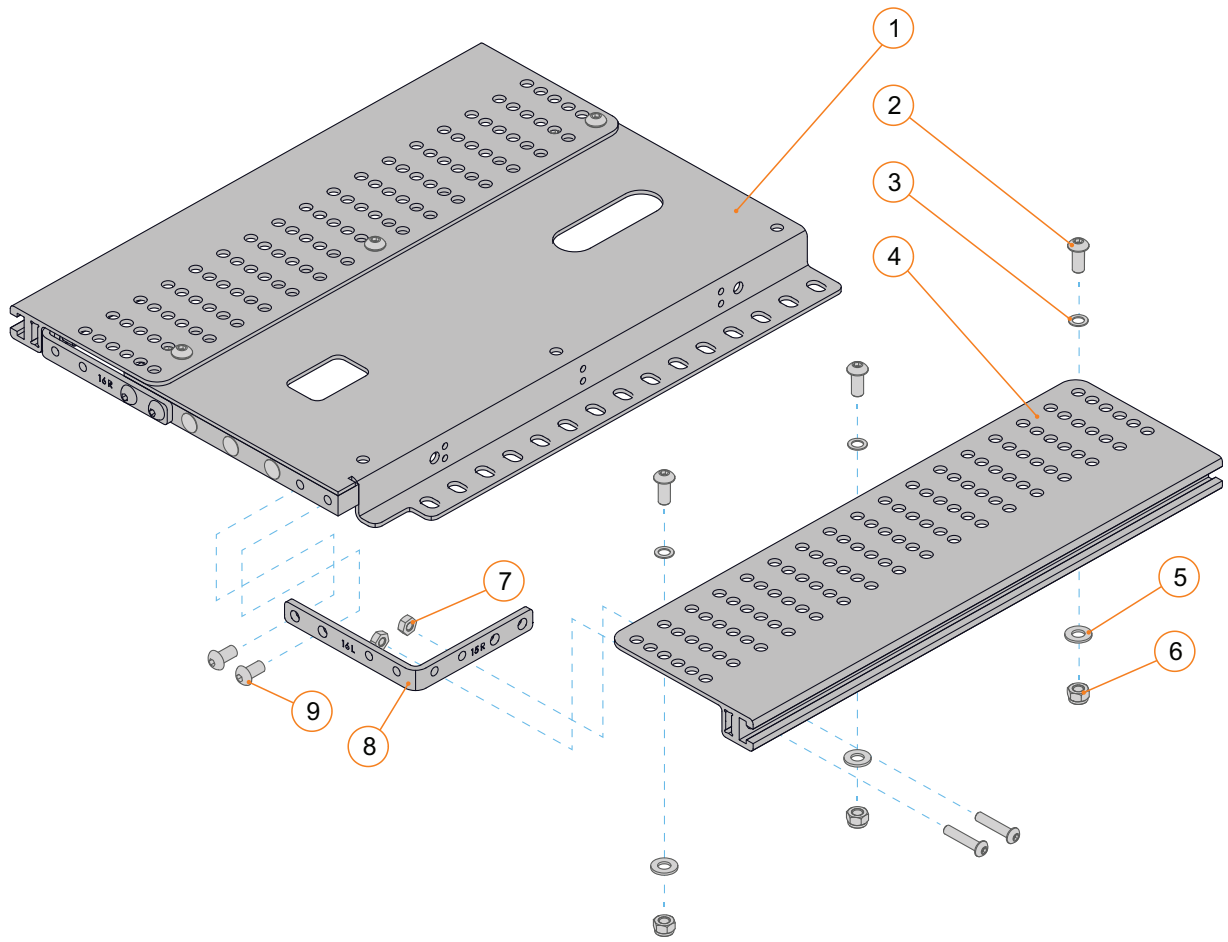

PEDIATRIC SEAT PAN REINFORCEMENTS			
ITEM #	PART #	DESCRIPTION	PRIOR TO
1A, 1B, 2-4	C-9548	PEDIATRIC SEAT REINFORCEMENT, 380 MM TO 405 MM (15 IN-16 IN) WIDE	2024-06-15

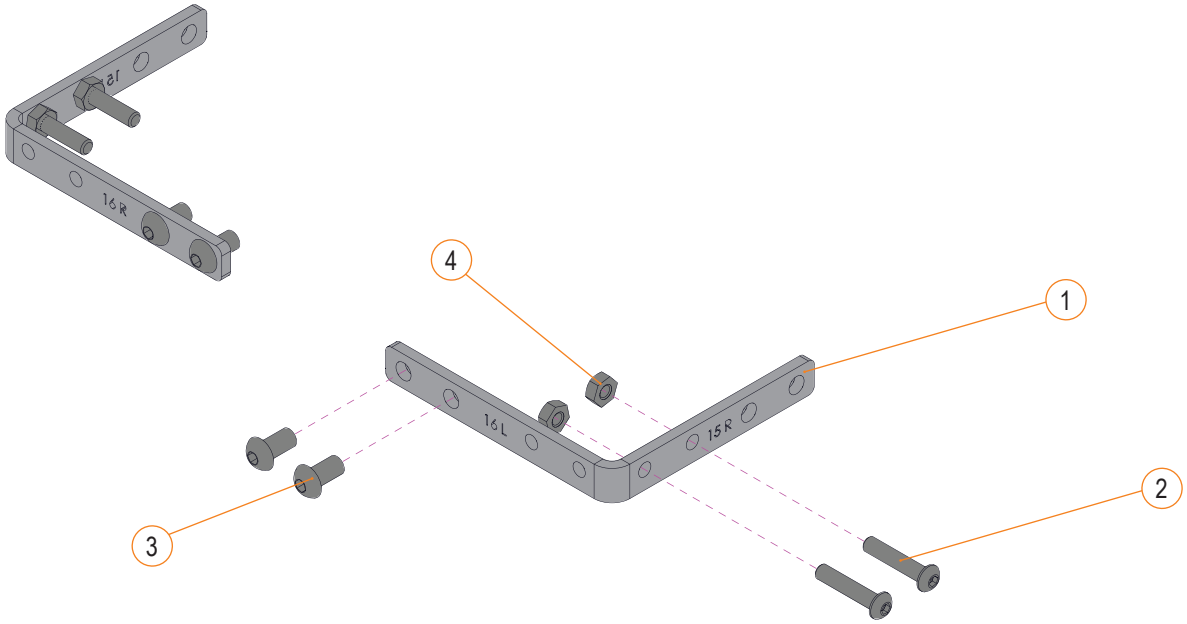

PEDIATRIC SEAT PAN

ITEM #	PART #	DESCRIPTION	EFFECTIVE
1-6	**1004122**	SEAT PAN, 11-16IN W(280-405MM), DEPTH 16IN (405MM)	2024-06-15
4-6	**1004724**	SEAT PAN FRONT REINFORCEMENT, 15-20IN W (380-510MM)	2024-06-15

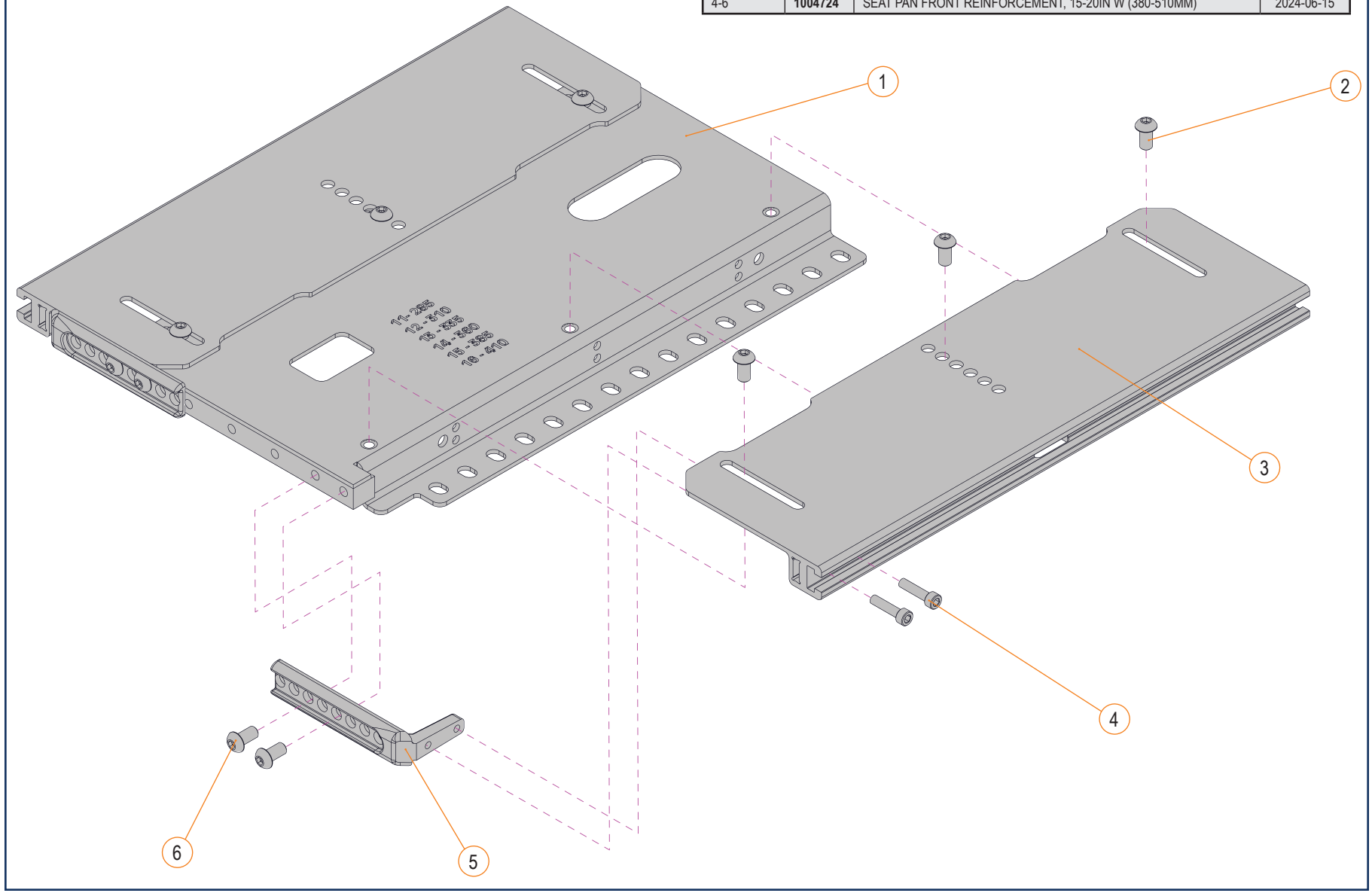

ADULT SEAT PAN			
ITEM #	PART #	DESCRIPTION	PRIOR TO
1A	**1002411**	ADULT SEAT REAR REINFORCEMENT, 380 MM TO 610 MM (15 IN-24 IN) WIDE	2024-06-15
1B	**1002412**	ADULT SEAT REAR REINFORCEMENT, 610 MM TO 710 MM (24 IN-28 IN) WIDE	2024-06-15
2A,3A	**S-0261**	SEAT PAN 380-505MM WIDTH (15-20IN), DEPTH 480 MM (19IN)	2024-06-15
2B,3B	**S-0262**	SEAT PAN 380-505MM WIDTH (15-20IN), DEPTH 560 MM (22IN)	2024-06-15
2C,3C	**S-0263**	SEAT PAN 480-610MM WIDTH (19-24IN), DEPTH 560 MM (22IN)	2024-06-15
2D,3D	**S-0264**	SEAT PAN 610-710MM WIDTH (24-28IN), DEPTH 560 MM (22IN)	2024-06-15

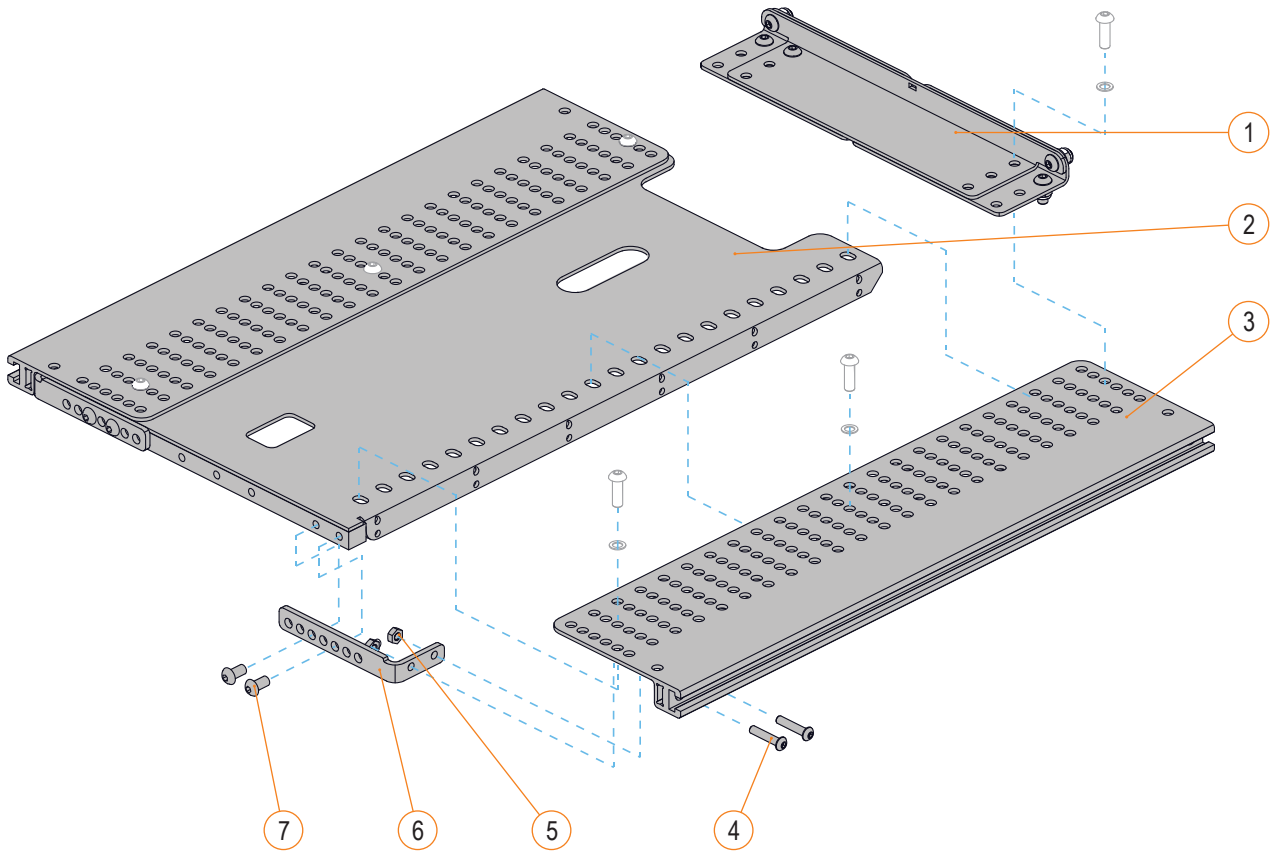

ADULT SEAT PAN REINFORCEMENTS			
ITEM #	PART #	DESCRIPTION	PRIOR TO
1A,1B,2,3,4	C-9521	ADULT SEAT FRONT REINFORCEMENT, 380 MM TO 505 MM (15 IN-20 IN) WIDE	2024-06-15
1C,1D,2,3,4	C-9523	ADULT SEAT FRONT REINFORCEMENT, 480 MM TO 610 MM (19 IN-24 IN) WIDE	2024-06-15
1E,1F,2,3,4	C-9525	ADULT SEAT FRONT REINFORCEMENT, 610 MM TO 710 MM (24 IN-28 IN) WIDE	2024-06-15

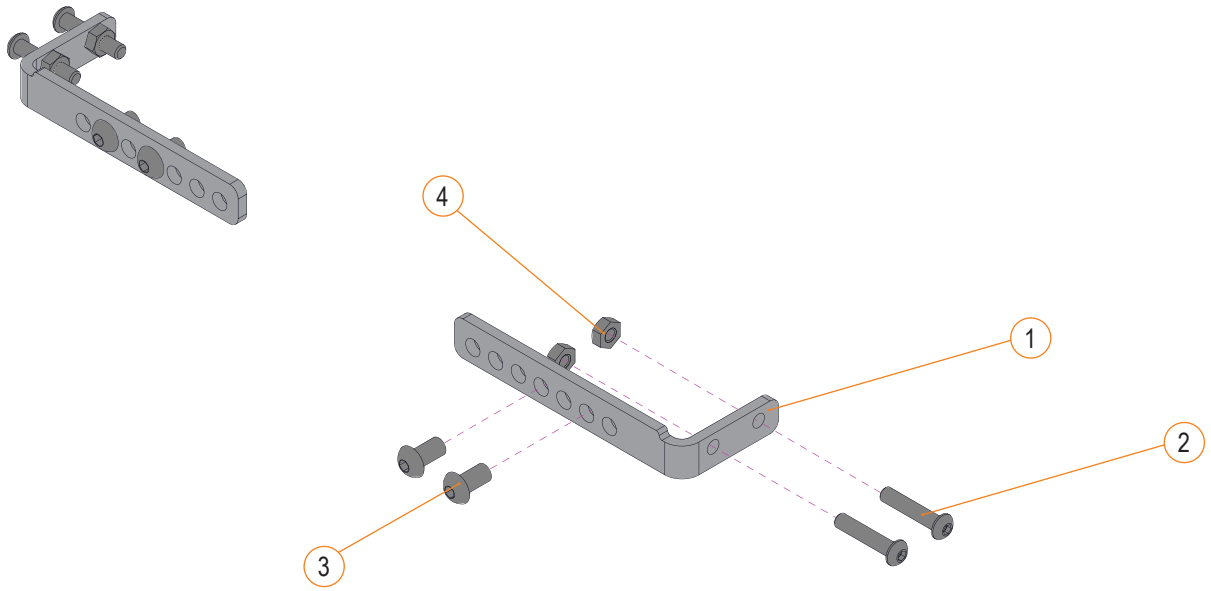

ADULT SEAT PAN STANDER			
ITEM #	PART #	DESCRIPTION	EFFECTIVE
1A	**1002411**	ADULT SEAT REAR REINFORCEMENT, 380 MM TO 610 MM (15 IN-24 IN) WIDE	2020-11-23
1B	**1002412**	ADULT SEAT REAR REINFORCEMENT, 610 MM TO 710 MM (24 IN-28 IN) WIDE	2020-11-23
2A, 3A	**S-0154**	SEAT ADJUSTABLE 15" TO 20" W X 19" D W/STANDER	2019-09-03
2B, 3B	**S-0155**	SEAT ADJUSTABLE 15" TO 20" W X 22" D W/STANDER	2019-09-03
2C, 3C	**S-0156**	SEAT ADJUSTABLE 19" TO 24" W X 22" D W/STANDER	2019-09-03
4,5,6A,6B,7	**C-9521**	ADULT SEAT FRONT REINFORCEMENT, 380 MM TO 505 MM (15 IN-20 IN) WIDE	2009-03-25
4,5,6C,6D,7	**C-9523**	ADULT SEAT FRONT REINFORCEMENT, 480 MM TO 610 MM (19 IN-24 IN) WIDE	2009-03-25
4,5,6E,6F,7	**C-9525**	ADULT SEAT FRONT REINFORCEMENT, 610 MM TO 710 MM (24 IN-28 IN) WIDE	2009-03-25

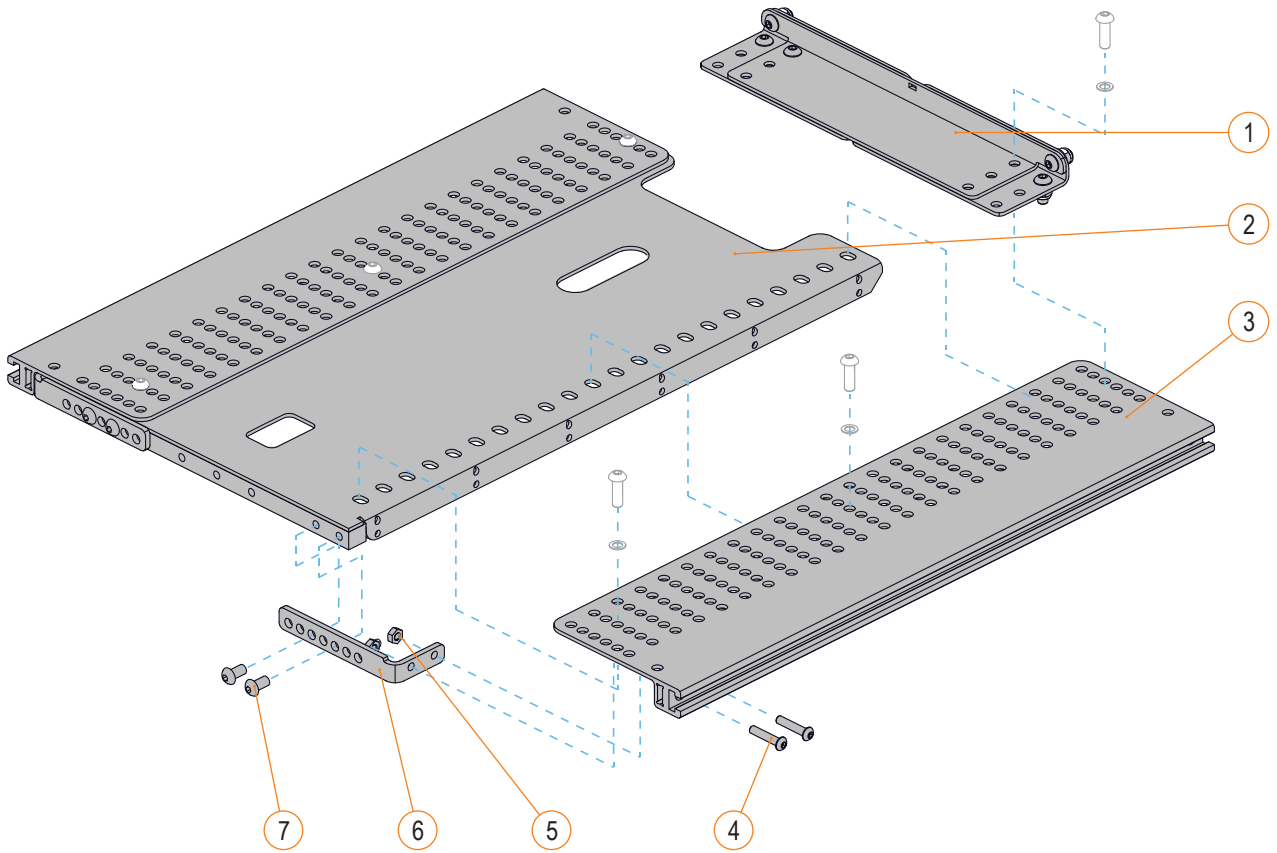

ADULT SEAT PAN

ITEM #	PART #	DESCRIPTION	EFFECTIVE
1A	**1004388**	KIT, STS REAR REINFORCE. 15-22IN (380-560MM),FIXED	2024-11-18
1B	**1004389**	KIT, STS REAR REINFORCE. 20-28IN (510-710MM),FIXED	2024-11-18
2A, 3, 4, 5A, 6, 7A	**1003241**	SEAT PAN, 14-19IN W(355-485MM), DEPTH 22IN (560MM)	2024-06-15
2B, 3, 4, 5A, 6, 7B	**1003242**	SEAT PAN, 14-19IN W(355-485MM), DEPTH 19IN (480MM)	2024-06-15
2A, 3, 4, 5A, 6, 7C	**1003244**	SEAT PAN, 17-22IN W(430-560MM), DEPTH 22IN (560MM)	2024-11-18
2B, 3, 4, 5A, 6, 7D	**1003243**	SEAT PAN, 17-22IN W(430-560MM), DEPTH 19IN (480MM)	2024-11-18
2E, 3, 4 5B, 6, 7E	**1004120**	SEAT PAN, 20-25IN W(510-635MM), DEPTH 22IN (560MM)	2024-06-15
2F, 3 4, 5A, 6, 7F	**1004121**	SEAT PAN, 23-28IN W(585-710MM), DEPTH 22IN (560MM)	2024-06-15
2G, 3 4, 5A, 6, 7G	**1004908**	SEAT PAN, 23-28IN W(585-710MM), DEPTH 24IN (610MM)	2024-06-15
4, 5A, 6	**1004724**	SEAT PAN FRONT REINFORCEMENT, 15-20IN W(380-510MM)	2024-06-15
4, 5B, 6	**1004725**	SEAT PAN FRONT REINFORCEMENT, 17-28IN W(430-710MM)	2024-06-15

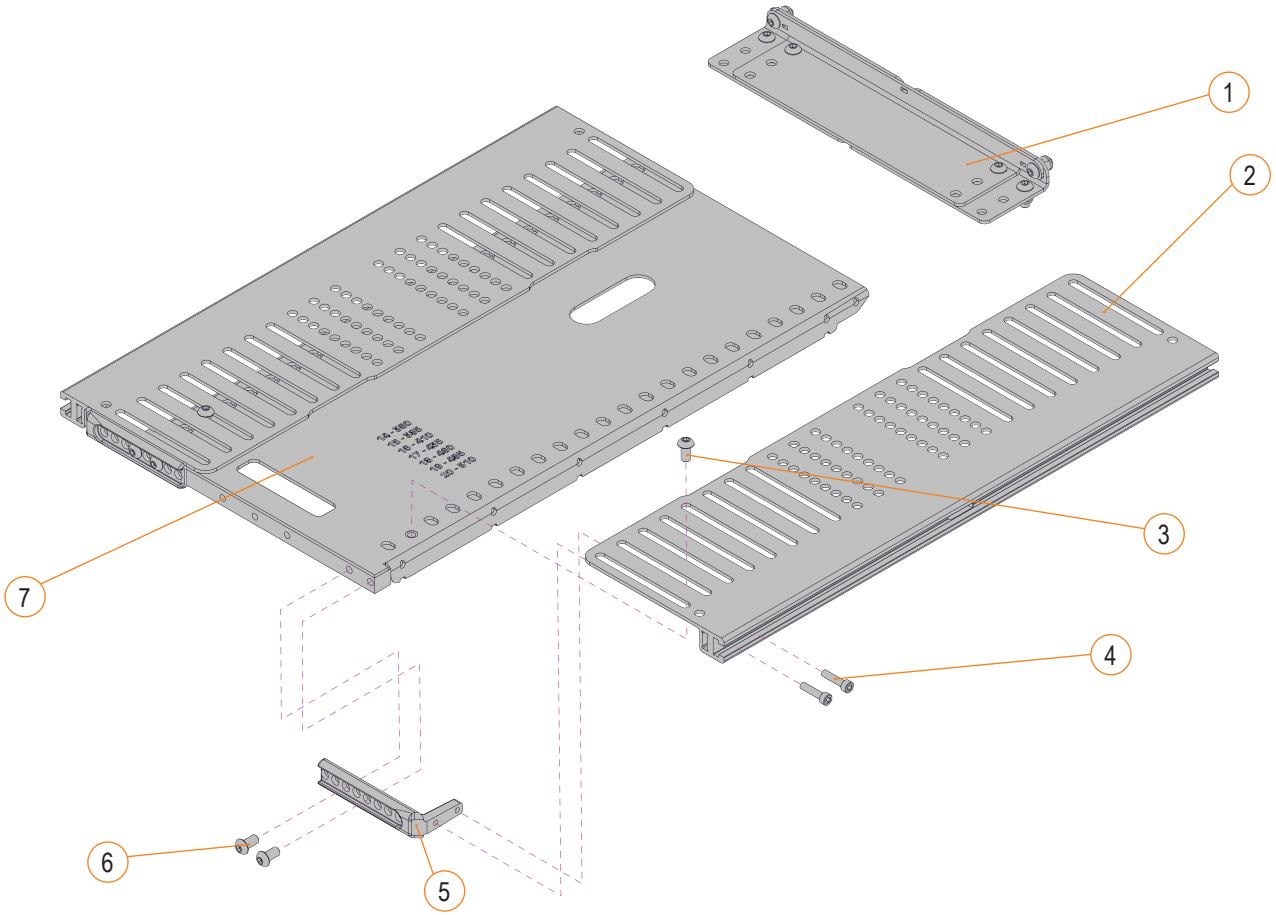

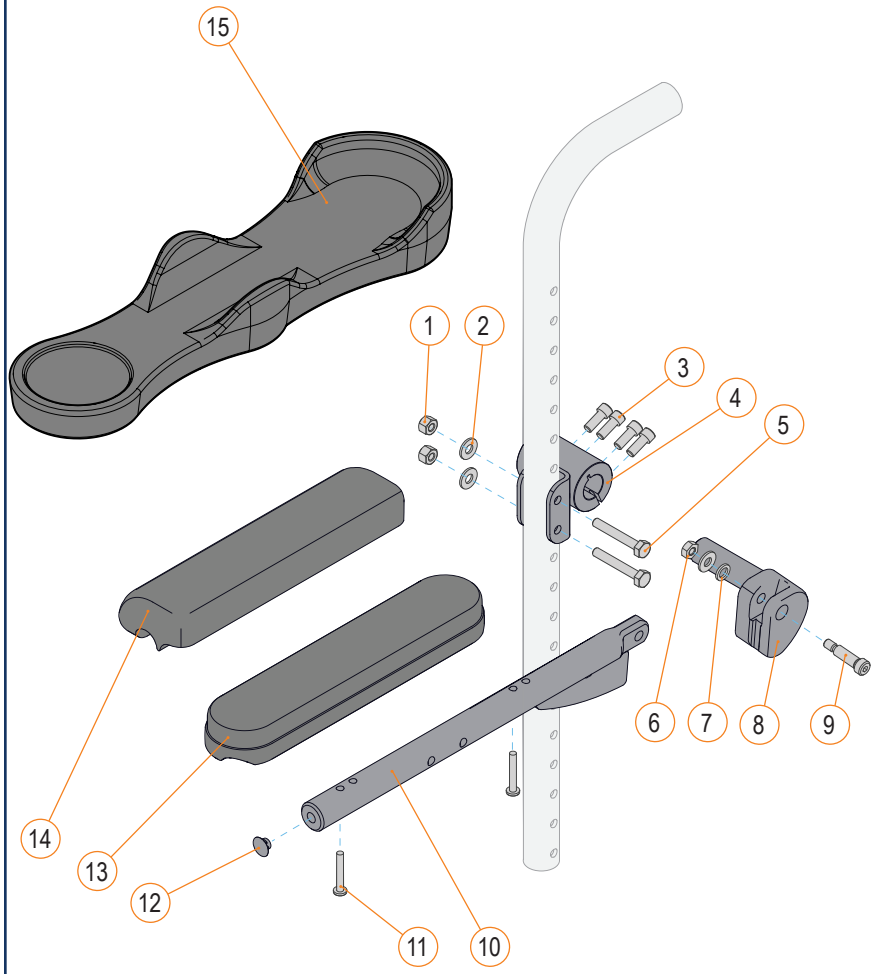

CANTILEVER ARMREST			
ITEM #	PART #	DESCRIPTION	EFFECTIVE
4A	**A91100**	REAR CANTILEVER ARMREST MOUNTING, LEFT HAND	2014-03-25
4B	**A91103**	REAR CANTILEVER ARMREST MOUNTING, RIGHT HAND	2014-03-25
4C	**43484-A07**	REAR CANTILEVER ARMREST MOUNT W/ RECLINE 18IN WIDE	2022-03-31
8A	**A91101**	PIVOT BLOC, CANTILEVER ARMREST, LEFT HAND	2014-03-25
8B	**A91104**	PIVOT BLOC, CANTILEVER ARMREST, RIGHT HAND	2014-03-25
10A	**A91102**	CANTILEVER ARMREST TUBE, LEFT HAND, DESK LENGTH	2014-03-25
10B	**A91105**	CANTILEVER ARMREST TUBE, RIGHT HAND, DESK LENGTH	2014-03-25
10C	**A91106**	CANTILEVER ARMREST TUBE, LEFT HAND, FULL LENGTH	2014-03-25
10D	**A91107**	CANTILEVER ARMREST TUBE, RIGHT HAND, FULL LENGTH	2014-03-25
10E	**112250-A07**	LH CANTILEVER ARM REST TUBE, 18" LENGTH	2023-08-15
10F	**112250-A08**	RH CANTILEVER ARM REST TUBE, 18" LENGTH	2023-08-15
10G	**112250-A03**	LH CANTILEVER ARM REST TUBE, 20" LENGTH	2023-08-15
10H	**112250-A04**	RH CANTILEVER ARM REST TUBE, 20" LENGTH	2023-08-15
10I	**112250-A11**	LH CANTILEVER ARM REST TUBE, 22" LENGTH	2023-08-15
10J	**112250-A12**	RH CANTILEVER ARM REST TUBE, 22" LENGTH	2023-08-15
11,15	**C-91126**	KIT CHANNEL ARMREST, ASSEMBLY	2013-01-14
13A,11	**S-0119**	FLAT ARM PAD, DESK LENGTH	2008-04-30
13B,11	**S-0120**	FLAT ARM PAD, FULL LENGTH	2008-04-30
13C,11	**S-0123**	FLAT GEL FOAM ARM PAD, DESK LENGTH	2008-04-30
13D,11	**S-0124**	FLAT GEL FOAM ARM PAD, FULL LENGTH	2008-04-30
14A,11	**S-0121**	WATERFALL ARM PAD, DESK LENGTH	2008-04-30
14B,11	**S-0122**	WATERFALL ARM PAD, FULL LENGTH	2008-04-30
14C,11	**S-0125**	WATERFALL GEL FOAM ARM PAD, DESK LENGTH	2008-04-30
14D,11	**S-0126**	WATERFALL GEL FOAM ARM PAD, FULL LENGTH	2008-04-30
1-3,4A,5-7, 8A,9,10A,12	**C-91130**	CANTILEVER ARMREST, LEFT HAND, DESK LENGTH	2014-03-25
1-3,4B,5-7, 8B,9,10B,12	**C-91129**	CANTILEVER ARMREST, RIGHT HAND, DESK LENGTH	2014-03-25
1-3,4A,5-7, 8A,9,10C,12	**C-91128**	CANTILEVER ARMREST, LEFT HAND, FULL LENGTH	2014-03-25
1-3,4B,5-7, 8B,9,10D,12	**C-91127**	CANTILEVER ARMREST, RIGHT HAND, FULL LENGTH	2014-03-25
1-3,4C,5-7, 8A,9,10A,12	**S-43484-18-DLH**	CANTILEVER ARMREST W/ RECLINE, DESK LGTH, LH, 18W	2022-03-31
1-3,4C,5-7, 8B,9,10B,12	**S-43484-18-DRH**	CANTILEVER ARMREST W/ RECLINE, DESK LGTH, RH, 18W	2022-03-31
1-3,4C,5-7, 8A,9,10C,12	**S-43484-18-FLH**	CANTILEVER ARMREST W/ RECLINE, FULL LGTH, LH, 18W	2022-03-31
1-3,4C,5-7, 8B,9,10D,12	**S-43484-18-FRH**	CANTILEVER ARMREST W/ RECLINE, FULL LGTH, RH, 18W	2022-03-31
1-3,4A,5-7, 8A,9,10E,12	**S-112250-18-L**	KIT - LH CANTILEVER ARM REST, LENGTH 18 IN	2023-08-15
1-3,4B,5-7, 8A,9,10F,12	**S-112250-18-R**	KIT - RH CANTILEVER ARM REST, LENGTH 18 IN	2023-08-15
1-3,4A,5-7, 8A,9,10G,12	**S-112250-20-L**	KIT - LH CANTILEVER ARM REST, LENGTH 20 IN	2023-08-15
1-3,4B,5-7, 8A,9,10H,12	**S-112250-20-R**	KIT - RH CANTILEVER ARM REST, LENGTH 20 IN	2023-08-15
1-3,4A,5-7, 8A,9,10I,12	**S-112250-22-L**	KIT - LH CANTILEVER ARM REST, LENGTH 22 IN	2023-08-15
1-3,4B,5-7, 8A,9,10J,12	**S-112250-22-R**	KIT - RH CANTILEVER ARM REST, LENGTH 22 IN	2023-08-15

SIGNATURE CANTILEVER ARMREST			
ITEM #	PART #	DESCRIPTION	EFFECTIVE
1	**FAUX**	KIT CHANNEL ARMPAD, ASSY	2025-06-26
2A	**1005431**	X-WIDE 3.5IN (90MM) FOAM ARMPAD, 10IN (255MM) LONG	2025-06-26
2B	**1005432**	X-WIDE 3.5IN (90MM) GEL ARMPAD, 10IN (255MM) LONG	2025-06-26
2C	**1005433**	X-WIDE 3.5IN (90MM) FOAM ARMPAD, 14IN (355MM) LONG	2025-06-26
2D	**1005434**	X-WIDE 3.5IN (90MM) GEL ARMPAD, 14IN (355MM) LONG	2025-06-26
2E	**1005435**	X-WIDE 3.5IN (90MM) FOAM ARMPAD, 16IN (405MM) LONG	2025-06-26
2F	**1005436**	X-WIDE 3.5IN (90MM) GEL ARMPAD, 16IN (405MM) LONG	2025-06-26
3A	**S-0119**	FLAT ARMPAD DESK LENGTH [K0019]	2025-06-26
3B	**S-0120**	FLAT ARMPAD FULL LENGTH [K0019]	2025-06-26
3C	**S-0123**	FLAT GEL FOAM ARM PAD, DESK LENGTH [K0019]	2025-06-26
3D	**S-0124**	FLAT GEL FOAM ARM PAD, FULL LENGTH [K0019]	2025-06-26
4A	**1003645**	KIT, CANTILEVER ARMREST, REAR CANE MOUNTING BKT,LH	2025-06-26
4B	**1004395**	KIT, CANTILEVER ARMREST, REAR CANE MOUNTING BKT,RH	2025-06-26
5A	**1003623**	KIT, CANTILEVER ARMREST EXTRUSION, 12IN (305MM),RH	2025-06-26
5B	**1003624**	KIT, CANTILEVER ARMREST EXTRUSION, 12IN (305MM),LH	2025-06-26
5C	**1003625**	KIT, CANTILEVER ARMREST EXTRUSION, 16IN (405MM),RH	2025-06-26
5D	**1003626**	KIT, CANTILEVER ARMREST EXTRUSION, 16IN (405MM),LH	2025-06-26
5E	**1003629**	KIT, CANTILEVER ARMREST EXTRUSION, 18IN (455MM),RH	2025-06-26
5F	**1003630**	KIT, CANTILEVER ARMREST EXTRUSION, 18IN (455MM),LH	2025-06-26
5G	**1005360**	KIT, CANTILEVER ARMREST EXTRUSION, 20IN (505MM),RH	2025-06-26
5H	**1005365**	KIT, CANTILEVER ARMREST EXTRUSION, 20IN (505MM),LH	2025-06-26
5I	**1005361**	KIT, CANTILEVER ARMREST EXTRUSION, 22IN (560MM),RH	2025-06-26
5J	**1005364**	KIT, CANTILEVER ARMREST EXTRUSION, 22IN (560MM),LH	2025-06-26

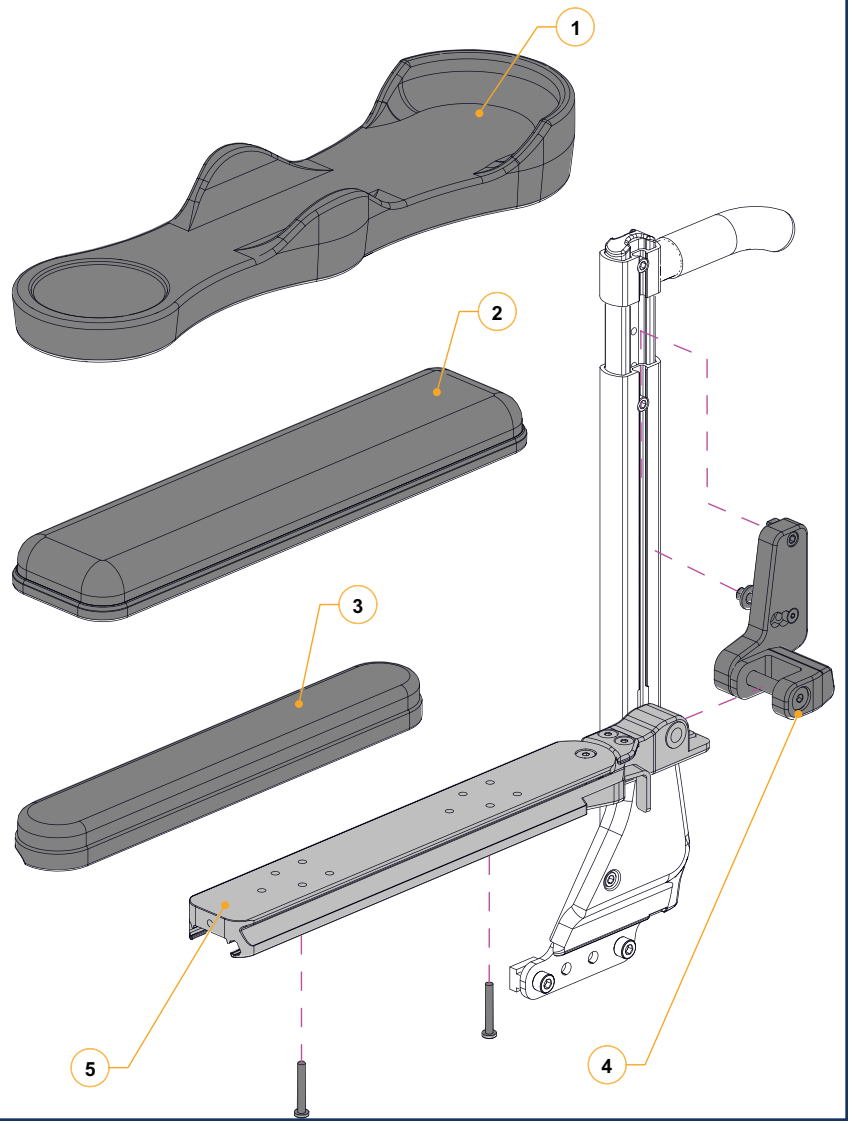

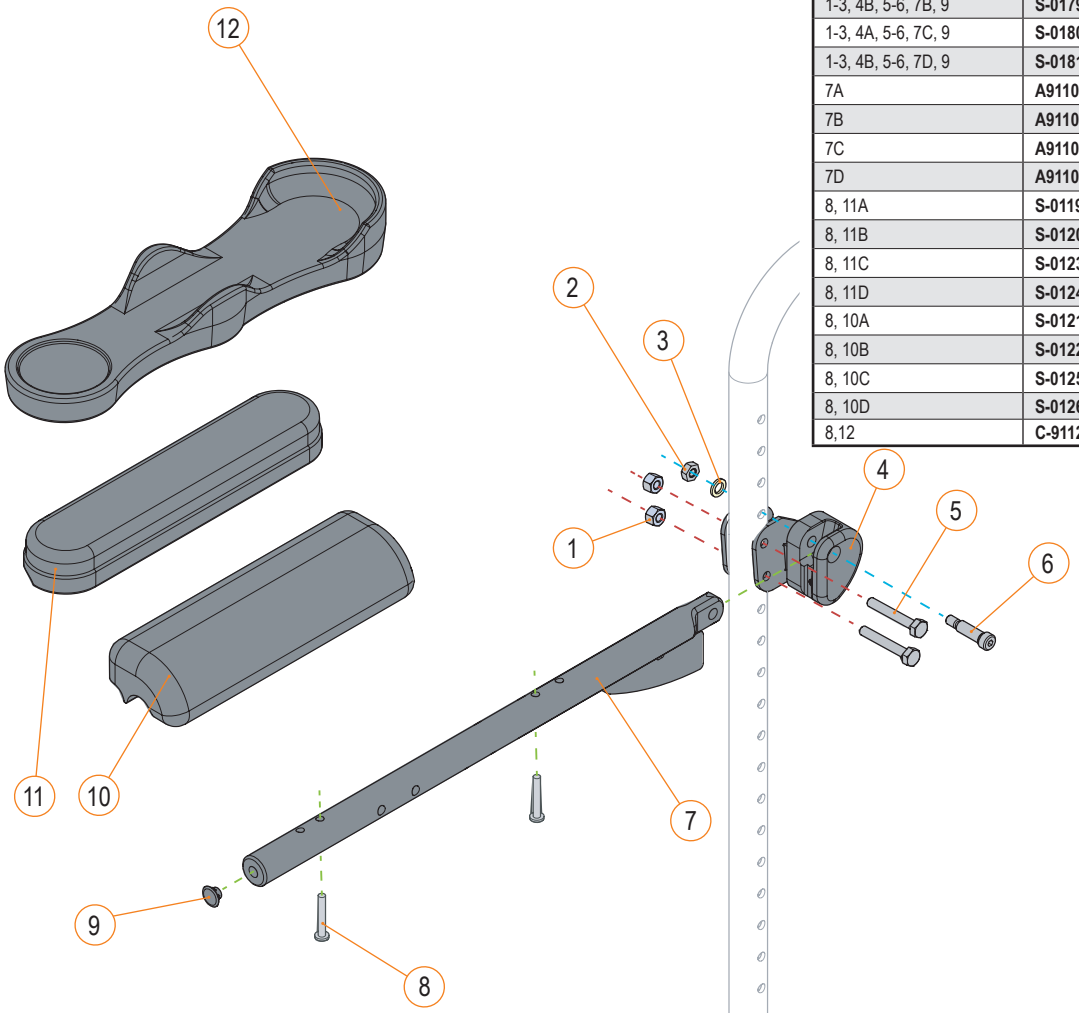

CANTILEVER ARMREST FOR STANDER

ITEM #	PART #	DESCRIPTION	EFFECTIVE
1-3, 4A, 5-6, 7A, 9	**S-0178**	CANTILEVER ARMREST, LEFT HAND, DESK LENGTH	2019-09-03
1-3, 4B, 5-6, 7B, 9	**S-0179**	CANTILEVER ARMREST, RIGHT HAND, DESK LENGTH	2019-09-03
1-3, 4A, 5-6, 7C, 9	**S-0180**	CANTILEVER ARMREST, LEFT HAND, FULL LENGTH	2019-09-03
1-3, 4B, 5-6, 7D, 9	**S-0181**	CANTILEVER ARMREST, RIGHT HAND, FULL LENGTH	2019-09-03
7A	**A91102**	CANTILEVER ARMREST TUBE, LEFT HAND, DESK LENGTH	2014-03-25
7B	**A91105**	CANTILEVER ARMREST TUBE, RIGHT HAND, DESK LENGTH	2014-03-25
7C	**A91106**	CANTILEVER ARMREST TUBE, LEFT HAND, FULL LENGTH	2014-03-25
7D	**A91107**	CANTILEVER ARMREST TUBE, RIGHT HAND, FULL LENGTH	2014-03-25
8, 11A	**S-0119**	FLAT ARM PAD, DESK LENGTH	2008-04-30
8, 11B	**S-0120**	FLAT ARM PAD, FULL LENGTH	2008-04-30
8, 11C	**S-0123**	FLAT GEL FOAM ARM PAD, DESK LENGTH	2008-04-30
8, 11D	**S-0124**	FLAT GEL FOAM ARM PAD, FULL LENGTH	2008-04-30
8, 10A	**S-0121**	WATERFALL ARM PAD, DESK LENGTH	2008-04-30
8, 10B	**S-0122**	WATERFALL ARM PAD, FULL LENGTH	2008-04-30
8, 10C	**S-0125**	WATERFALL GEL FOAM PAD, DESK LENGTH	2008-04-30
8, 10D	**S-0126**	WATERFALL GEL FOAM PAD, FULL LENGTH	2008-04-30
8,12	**C-91126**	KIT CHANNEL ARMREST, ASSEMBLY	2013-01-14

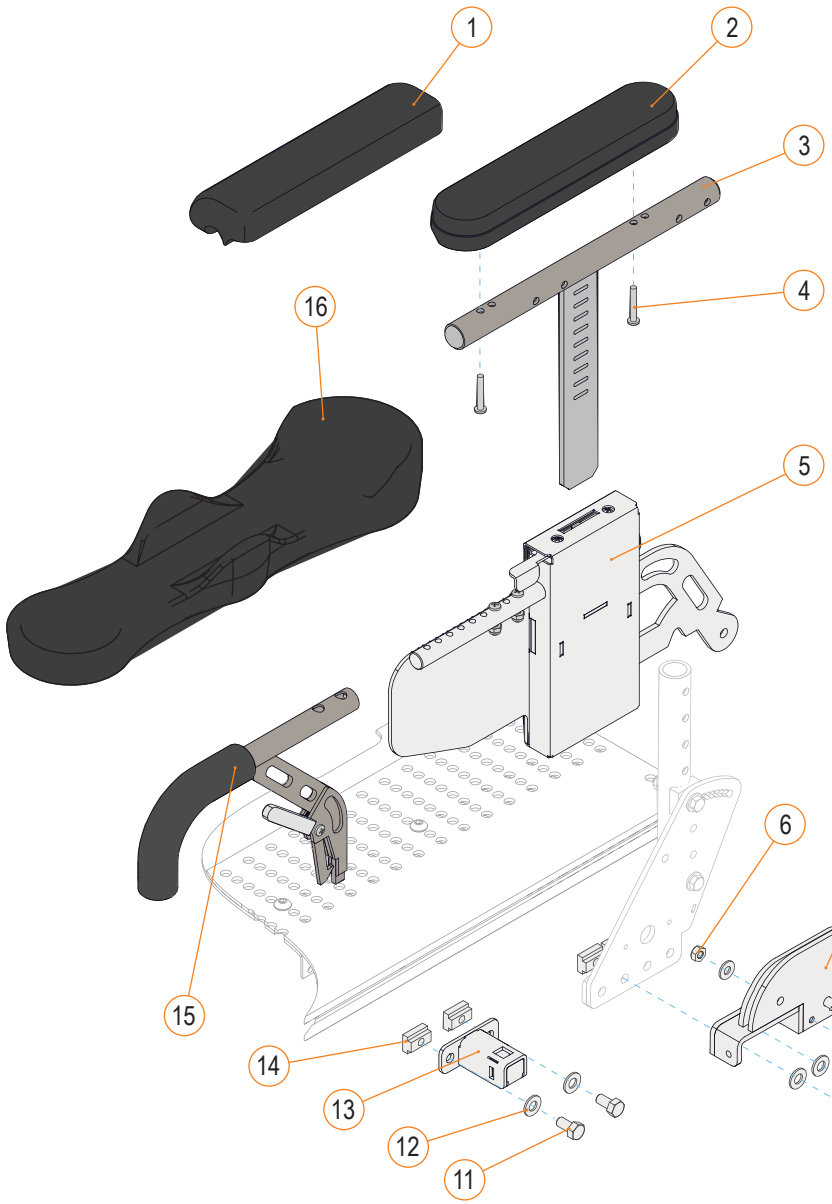

DUAL POST ARMREST ASSEMBLY

ITEM #	PART #	DESCRIPTION	PRIOR TO
3A	**C-91115**	PEDIATRIC DUAL POST ARMREST UPPER ASM, LEFT HAND	2017-01-01
3B	**C-91114**	PEDIATRIC DUAL POST ARMREST UPPER ASM, RIGHT HAND	2017-01-01
3C	**C-91102**	DUAL POST ARMREST UPPER ASM, LEFT HAND, DESK LENGTH	2017-01-01
3D	**C-91104**	DUAL POST ARMREST UPPER ASM, RIGHT HAND, DESK LENGTH	2017-01-01
3E	**C-91106**	DUAL POST ARMREST UPPER ASM, LEFT HAND, FULL LENGTH	2017-01-01
3F	**C-91107**	DUAL POST ARMREST UPPER ASM, RIGHT HAND, FULL LENGTH	2017-01-01
5A	**C-91109**	DUALPOST ARM ASSY, RH, DESK, MODEL #3, FRAME ASSY	2013-12-20
5B	**C-91108**	DUALPOST ARM ASSY, LH, DESK, MODEL #3, FRAME ASSY	2013-12-20
15A	**C-91116**	PEDIATRIC DUAL POST ARMREST TRANSFER HANDLE	2017-01-01
15B	**C-91103**	ADULT DUAL POST ARMREST TRANSFER HANDLE, LEFT HAND	2017-01-01
15C	**C-91105**	ADULT DUAL POST ARMREST TRANSFER HANDLE, RIGHT HAND	2017-01-01
1A,4	**S-0121**	WATERFALL ARM PAD, DESK LENGTH	2017-01-01
1B,4	**S-0122**	WATERFALL ARM PAD, FULL LENGTH	2017-01-01
1C,4	**S-0125**	WATERFALL GEL FOAM ARM PAD, DESK LENGTH	2017-01-01
1D,4	**S-0126**	WATERFALL GEL FOAM ARM PAD, FULL LENGTH	2017-01-01
2A,4	**S-0119**	FLAT ARM PAD, DESK LENGTH	2017-01-01
2B,4	**S-0120**	FLAT ARM PAD, FULL LENGTH	2017-01-01
2C,4	**S-0123**	FLAT GEL FOAM ARM PAD, DESK LENGTH	2017-01-01
2D,4	**S-0124**	FLAT GEL FOAM ARM PAD, FULL LENGTH	2017-01-01
4,16	**C-91126**	KIT CHANNEL ARMREST ASSEMBLY	2013-01-14
6,7A,8-10	**C-91135**	DUAL POST FRONT LOWER RECEIVER KIT RH	2017-01-01
6,7B,8-10	**C-91136**	DUAL POST FRONT LOWER RECEIVER KIT LH	2017-01-01
11-14	**S-0118**	DUAL POST FRONT LOWER RECEIVER KIT	2017-01-01

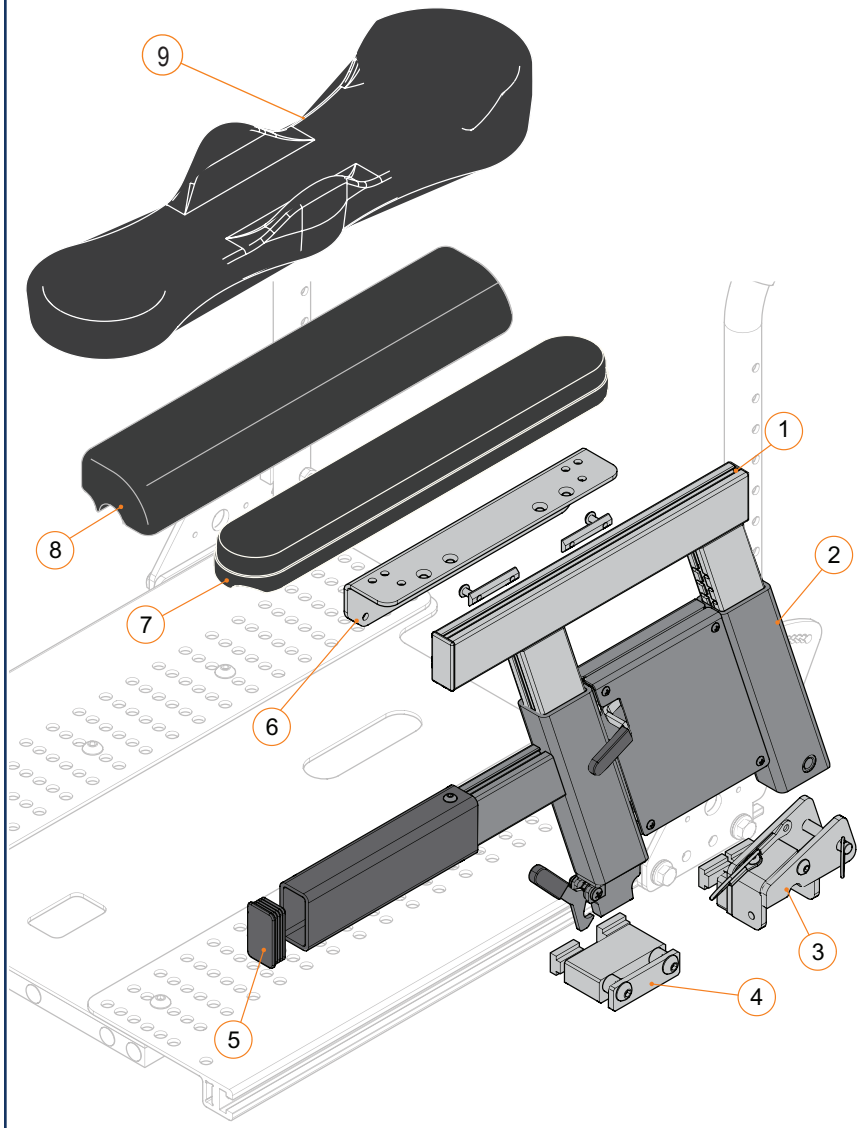

DUAL POST ARMREST ASSEMBLY

ITEM #	PART #	DESCRIPTION	EFFECTIVE
1A	S-0100	PEDIATRIC DUAL POST ARMREST UPPER ASM, LEFT HAND	2017-01-01
1B	S-0101	PEDIATRIC DUAL POST ARMREST UPPER ASM, RIGHT HAND	2017-01-01
1C	S-0102	ADULT DUAL POST ARMREST UPPER ASM, LEFT HAND	2017-01-01
1D	S-0103	ADULT DUAL POST ARMREST UPPER ASM, RIGHT HAND	2017-01-01
2A, 5	S-0104	PEDIATRIC DUAL POST ARMREST LOWER ASM, LEFT HAND	2017-01-01
2B, 5	S-0105	PEDIATRIC DUAL POST ARMREST LOWER ASM, RIGHT HAND	2017-01-01
2C, 5	S-0106	ADULT DUAL POST ARMREST LOWER ASM, LEFT HAND	2017-01-01
2D, 5	S-0107	ADULT DUAL POST ARMREST LOWER ASM, RIGHT HAND	2017-01-01
5	K00054	RECTANGULAR CAP, 25 MM x 45 MM	2017-01-01
6A	S-0108	PEDIATRIC ARM PAD INTERFACE BRACKET	2017-01-01
6B	S-0109	ARM PAD INTERFACE BRACKET, DESK LENGTH	2017-01-01
6C	S-0110	ARM PAD INTERFACE BRACKET, FULL LENGTH	2017-01-01
7A	S-0123	FLAT GEL FOAM ARM PAD, DESK LENGTH	2008-04-30
7B	S-0124	FLAT GEL FOAM ARM PAD, FULL LENGTH	2008-04-30
7C	S-0119	FLAT ARMPAD DESK LENGTH	2021-09-01
7D	S-0120	FLAT ARMPAD FULL LENGTH	2021-09-01
8A	S-0121	WATERFALL ARM PAD, DESK LENGTH	2008-04-30
8B	S-0122	WATERFALL ARM PAD, FULL LENGTH	2008-04-30
8C	S-0125	WATERFALL GEL FOAM ARM PAD, DESK LENGTH	2008-04-30
8D	S-0126	WATERFALL GEL FOAM ARM PAD, FULL LENGTH	2008-04-30
9	C-91126	KIT CHANNEL ARMREST ASSEMBLY	2013-01-14
3A,4A	S-0111	DUAL POST LOWER RECEIVER, LEFT HAND	2017-01-01
3B,4B	S-0112	DUAL POST LOWER RECEIVER, RIGHT HAND	2017-01-01
1A,2A,5,6C	1004142	DUAL POST ARMREST FULL - LH (7.25-10.25IN)	2022-09-06
1B,2B,5,6C	1004143	DUAL POST ARMREST FULL -RH (7.25-10.25IN)	2022-09-06
1A,2A,5,6A	1004144	DUAL POST ARMREST DESK - LH (7.25-10.25IN)	2022-09-06
1B,2B,5,6A	1004145	DUAL POST ARMREST DESK - RH (7.25-10.25IN)	2022-09-06
1C,2C,5,6C	1004146	DUAL POST ARMREST FULL - LH (10.25-15.25IN)	2022-09-06
1D,2D,5,6C	1004147	DUAL POST ARMREST FULL - RH (10.25-15.25IN)	2022-09-06
1C,2C,5,6B	1004148	DUAL POST ARMREST DESK - LH (10.25-15.25IN)	2022-09-06
1D,2D,5,6B	1004149	DUAL POST ARMREST DESK - RH (10.25-15.25IN)	2022-09-06

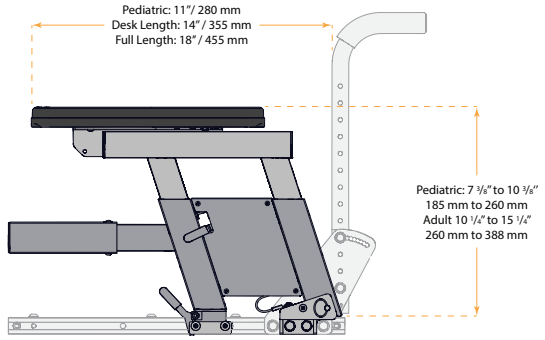

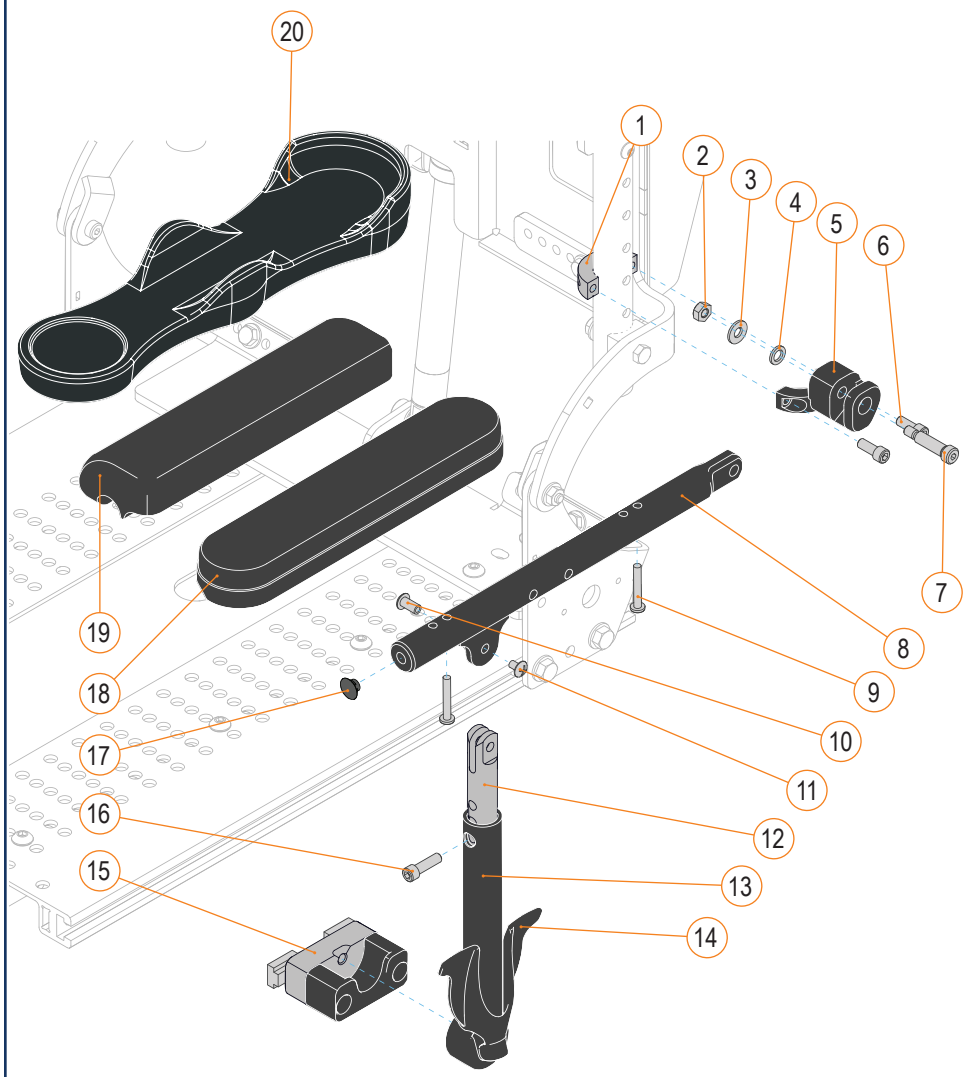

RECLINING ARMREST ASSEMBLY

ITEM #	PART #	DESCRIPTION	EFFECTIVE
8A	**A91118**	RECLINING ARMREST TUBE, DESK LENGTH	2014-12-24
8B	**A91114**	RECLINING ARMREST TUBE, FULL LENGTH	2014-12-24
8C	**48247-A01**	RECLINING ARMREST TUBE, FULL LENGTH 18 IN	2021-03-01
8D	**48247-A02**	RECLINING ARMREST TUBE, FULL LENGTH 20 IN	2021-03-01
8E	**48247-A03**	RECLINING ARMREST TUBE, FULL LENGTH 22 IN	2021-03-01
13A,14	**C-91145**	RELEASE LEVER ASSEMBLY, LEFT HAND	2014-12-24
13B,14	**C-91143**	RELEASE LEVER ASSEMBLY, RIGHT HAND	2014-12-24
14	**A91110**	RELEASE HANDLE, RECLINING ARMREST	2014-12-24
9,18A	**S-0119**	FLAT ARM PAD, DESK LENGTH	2008-04-30
9,18B	**S-0120**	FLAT ARM PAD, FULL LENGTH	2008-04-30
9,18C	**S-0123**	FLAT GEL FOAM ARM PAD, DESK LENGTH	2008-04-30
9,18D	**S-0124**	FLAT GEL FOAM ARM PAD, FULL LENGTH	2008-04-30
9,19A	**S-0121**	WATERFALL ARM PAD, DESK LENGTH	2008-04-30
9,19B	**S-0122**	WATERFALL ARM PAD, FULL LENGTH	2008-04-30
9,19C	**S-0125**	WATERFALL GEL FOAM ARM PAD, DESK LENGTH	2008-04-30
9,19D	**S-0126**	WATERFALL GEL FOAM ARM PAD, FULL LENGTH	2008-04-30
9,20	**C-91126**	KIT CHANNEL ARMREST, ASSEMBLY	2013-01-14
15	**C-91144**	ARMREST RECEIVER, RECLINER ARMREST	2014-12-24
1-4,5A,6,7,8A,10-12,13A,14,16,17	**C-91142**	RECLINING ARMREST ASSEMBLY, LEFT HAND, DESK LENGTH	2021-03-01
1-4,5B,6,7,8A,10-12,13B,14,16,17	**C-91141**	RECLINING ARMREST ASSEMBLY, RIGHT HAND, DESK LENGTH	2021-03-01
1-4,5A,6,7,8B,10-12,13A,14,16,17	**C-91140**	RECLINING ARMREST ASSEMBLY, LEFT HAND, FULL LENGTH	2021-03-01
1-4,5B,6,7,8B,10-12,13B,14,16,17	**C-91139**	RECLINING ARMREST ASSEMBLY, RIGHT HAND, FULL LENGTH	2021-03-01
1-4,5A,6,7,8C,10-12,13A,14,16,17	**S-48247-18-L**	KIT-LH RECLINING ARMREST ASS. FULL LENGTH 18 IN	2021-03-01
1-4,5B,6,7,8C,10-12,13B,14,16,17	**S-48247-18-R**	KIT-RH RECLINING ARMREST ASS. FULL LENGTH 18 IN	2021-03-01
1-4,5A,6,7,8D,10-12,13A,14,16,17	**S-48247-20-L**	KIT-LH RECLINING ARMREST ASS. FULL LENGTH 20 IN	2021-03-01
1-4,5B,6,7,8D,10-12,13B,14,16,17	**S-48247-20-R**	KIT-RH RECLINING ARMREST ASS. FULL LENGTH 20 IN	2021-03-01
1-4,5A,6,7,8E,10-12,13A,14,16,17	**S-48247-22-L**	KIT-LH RECLINING ARMREST ASS. FULL LENGTH 22 IN	2021-03-01
1-4,5B,6,7,8E,10-12,13B,14,16,17	**S-48247-22-R**	KIT-RH RECLINING ARMREST ASS. FULL LENGTH 22 IN	2021-03-01

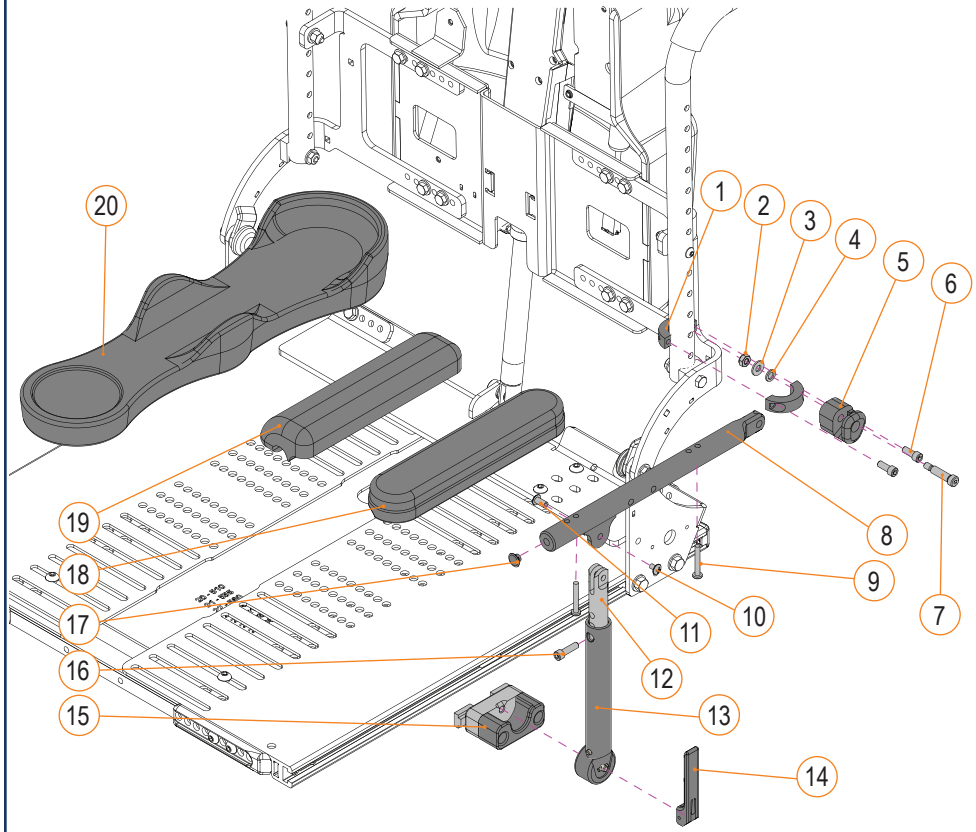

RECLINING ARMREST ASSEMBLY

ITEM #	PART #	DESCRIPTION	EFFECTIVE
8A	**A91118**	RECLINING ARMREST TUBE, DESK LENGTH	2014-12-24
8B	**A91114**	RECLINING ARMREST TUBE, FULL LENGTH	2014-12-24
8C	**48247-A01**	RECLINING ARMREST TUBE, FULL LENGTH 18 IN	2021-03-01
8D	**48247-A02**	RECLINING ARMREST TUBE, FULL LENGTH 20 IN	2021-03-01
8E	**48247-A03**	RECLINING ARMREST TUBE, FULL LENGTH 22 IN	2021-03-01
13A,14	**C-91145**	RELEASE LEVER ASSEMBLY, LEFT HAND	2014-12-24
13B,14	**C-91143**	RELEASE LEVER ASSEMBLY, RIGHT HAND	2014-12-24
14	**1005261**	QUICK RELEASE ARM, RECLINE ARMREST (CUSTOM)	2025-04-01
9,18A	**S-0119**	FLAT ARM PAD, DESK LENGTH	2008-04-30
9,18B	**S-0120**	FLAT ARM PAD, FULL LENGTH	2008-04-30
9,18C	**S-0123**	FLAT GEL FOAM ARM PAD, DESK LENGTH	2008-04-30
9,18D	**S-0124**	FLAT GEL FOAM ARM PAD, FULL LENGTH	2008-04-30
9,19A	**S-0121**	WATERFALL ARM PAD, DESK LENGTH	2008-04-30
9,19B	**S-0122**	WATERFALL ARM PAD, FULL LENGTH	2008-04-30
9,19C	**S-0125**	WATERFALL GEL FOAM ARM PAD, DESK LENGTH	2008-04-30
9,19D	**S-0126**	WATERFALL GEL FOAM ARM PAD, FULL LENGTH	2008-04-30
9,20	**C-91126**	KIT CHANNEL ARMREST, ASSEMBLY	2013-01-14
15	**C-91144**	ARMREST RECEIVER, RECLINER ARMREST	2014-12-24
1-4,5A,6,7,8A,10-12,13A,14,16,17	**C-91142**	RECLINING ARMREST ASSEMBLY, LEFT HAND, DESK LENGTH	2021-03-01
1-4,5B,6,7,8A,10-12,13B,14,16,17	**C-91141**	RECLINING ARMREST ASSEMBLY, RIGHT HAND, DESK LENGTH	2021-03-01
1-4,5A,6,7,8B,10-12,13A,14,16,17	**C-91140**	RECLINING ARMREST ASSEMBLY, LEFT HAND, FULL LENGTH	2021-03-01
1-4,5B,6,7,8B,10-12,13B,14,16,17	**C-91139**	RECLINING ARMREST ASSEMBLY, RIGHT HAND, FULL LENGTH	2021-03-01
1-4,5A,6,7,8C,10-12,13A,14,16,17	**S-48247-18-L**	KIT-LH RECLINING ARMREST ASS. FULL LENGTH 18 IN	2021-03-01
1-4,5B,6,7,8C,10-12,13B,14,16,17	**S-48247-18-R**	KIT-RH RECLINING ARMREST ASS. FULL LENGTH 18 IN	2021-03-01
1-4,5A,6,7,8D,10-12,13A,14,16,17	**S-48247-20-L**	KIT-LH RECLINING ARMREST ASS. FULL LENGTH 20 IN	2021-03-01
1-4,5B,6,7,8D,10-12,13B,14,16,17	**S-48247-20-R**	KIT-RH RECLINING ARMREST ASS. FULL LENGTH 20 IN	2021-03-01
1-4,5A,6,7,8E,10-12,13A,14,16,17	**S-48247-22-L**	KIT-LH RECLINING ARMREST ASS. FULL LENGTH 22 IN	2021-03-01
1-4,5B,6,7,8E,10-12,13B,14,16,17	**S-48247-22-R**	KIT-RH RECLINING ARMREST ASS. FULL LENGTH 22 IN	2021-03-01

SIGNATURE RECLINING ARMREST ASSEMBLY

ITEM #	PART #	DESCRIPTION	EFFECTIVE
1	**C-91126**	KIT CHANNEL ARMPAD, ASSY	2025-06-26
2A, 6	**1005431**	X-WIDE 3.5IN (90MM) FOAM ARMPAD, 10IN (255MM) LONG	2025-06-26
2B, 6	**1005432**	X-WIDE 3.5IN (90MM) GEL ARMPAD, 10IN (255MM) LONG	2025-06-26
2C, 6	**1005433**	X-WIDE 3.5IN (90MM) FOAM ARMPAD, 14IN (355MM) LONG	2025-06-26
2D, 6	**1005434**	X-WIDE 3.5IN (90MM) GEL ARMPAD, 14IN (355MM) LONG	2025-06-26
2E, 6	**1005435**	X-WIDE 3.5IN (90MM) FOAM ARMPAD, 16IN (405MM) LONG	2025-06-26
2F, 6	**1005436**	X-WIDE 3.5IN (90MM) GEL ARMPAD, 16IN (405MM) LONG	2025-06-26
3A, 6	**S-0119**	FLAT ARMPAD DESK LENGTH [K0019]	2025-06-26
3B, 6	**S-0120**	FLAT ARMPAD FULL LENGTH [K0019]	2025-06-26
3C, 6	**S-0123**	FLAT GEL FOAM ARM PAD, DESK LENGTH [K0019]	2025-06-26
3D, 6	**S-0124**	FLAT GEL FOAM ARM PAD, FULL LENGTH [K0019]	2025-06-26
4A	**1003631-L**	KIT, MOUNT, TNBK, ENDO, RECL., 10.25-13.25 IN, LH	2025-06-26
4B	**1003631-R**	KIT, MOUNT, TNBK, ENDO, RECL., 10.25-13.25 IN, RH	2025-06-26
4C	**1003633-L**	KIT, MOUNT, TNBK, ENDO, RECL., 14.25-16.25 IN, LH	2025-06-26
4D	**1003633-R**	KIT, MOUNT, TNBK, ENDO, RECL., 14.25-16.25 IN, RH	2025-06-26
5A	**1003623**	KIT, CANTILEVER ARMREST EXTRUSION, 12IN (305MM),RH	2025-06-26
5B	**1003624**	KIT, CANTILEVER ARMREST EXTRUSION, 12IN (305MM),LH	2025-06-26
5C	**1003625**	KIT, CANTILEVER ARMREST EXTRUSION, 16IN (405MM),RH	2025-06-26
5D	**1003626**	KIT, CANTILEVER ARMREST EXTRUSION, 16IN (405MM),LH	2025-06-26
5E	**1003629**	KIT, CANTILEVER ARMREST EXTRUSION, 18IN (455MM),RH	2025-06-26
5F	**1003630**	KIT, CANTILEVER ARMREST EXTRUSION, 18IN (455MM),LH	2025-06-26
5G	**1005360**	KIT, CANTILEVER ARMREST EXTRUSION, 20IN (505MM),RH	2025-06-26
5H	**1005365**	KIT, CANTILEVER ARMREST EXTRUSION, 20IN (505MM),LH	2025-06-26
5I	**1005361**	KIT, CANTILEVER ARMREST EXTRUSION, 22IN (560MM),RH	2025-06-26
5J	**1005364**	KIT, CANTILEVER ARMREST EXTRUSION, 22IN (560MM),LH	2025-06-26

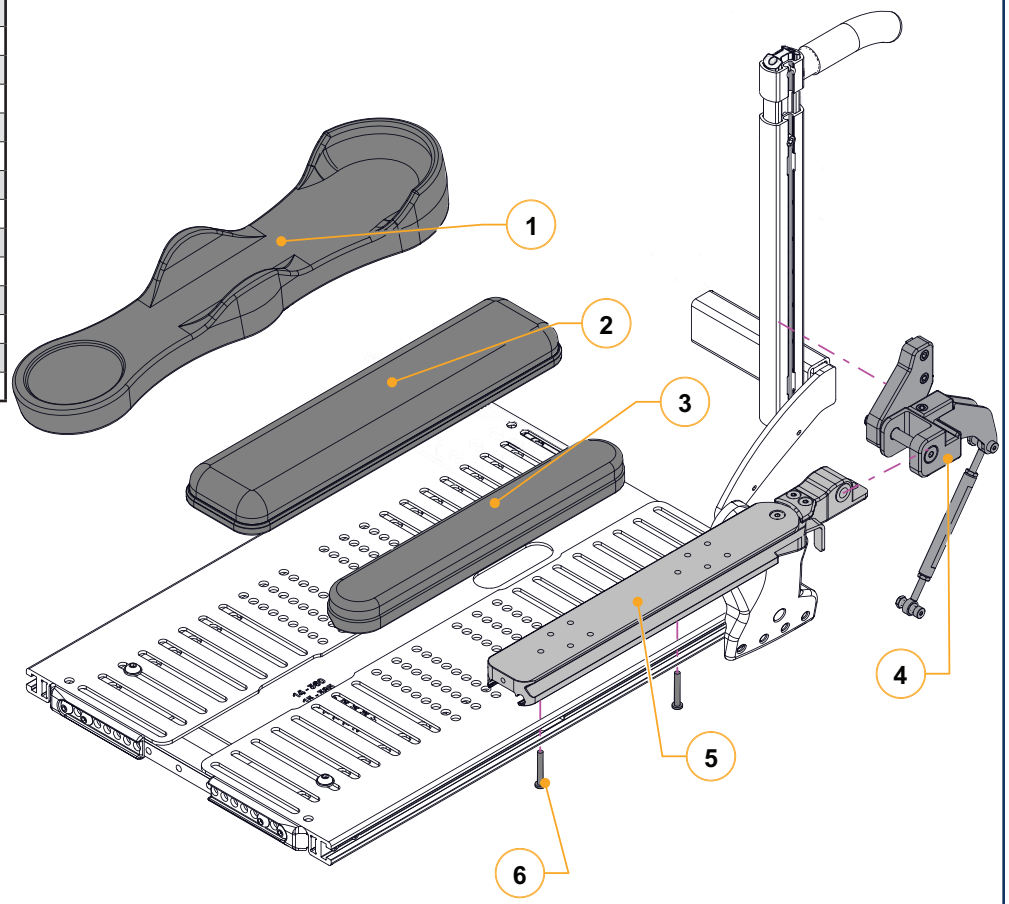

SIGNATURE RECLINING HD ARMREST ASSEMBLY

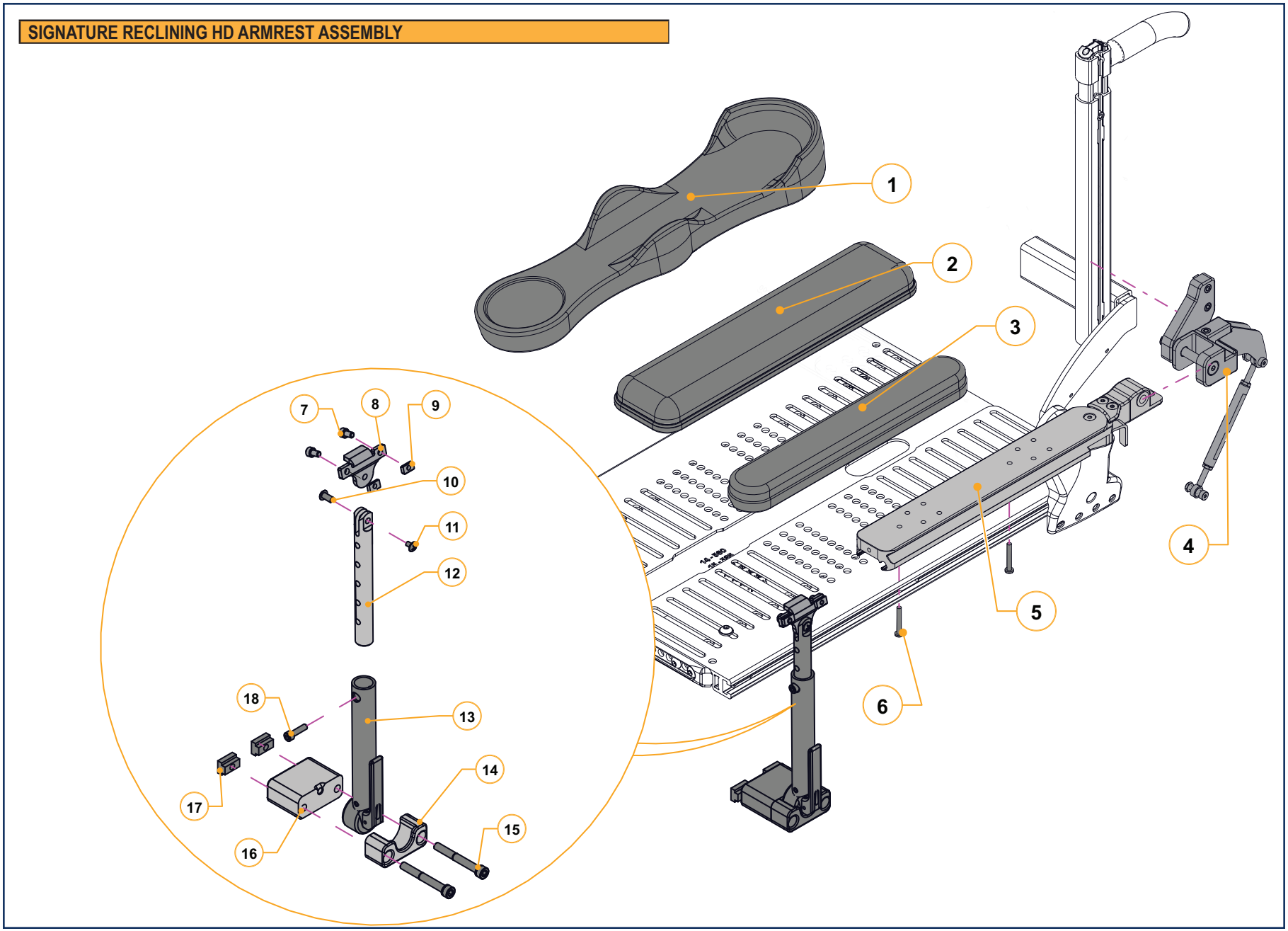

SIGNATURE RECLINING HD ARMREST ASSEMBLY

ITEM #	PART #	DESCRIPTION	EFFECTIVE
1	C-91126	KIT CHANNEL ARMPAD, ASSY	2025-06-26
2A, 6	1005431	X-WIDE 3.5IN (90MM) FOAM ARMPAD, 10IN (255MM) LONG	2025-06-26
2B, 6	1005432	X-WIDE 3.5IN (90MM) GEL ARMPAD, 10IN (255MM) LONG	2025-06-26
2C, 6	1005433	X-WIDE 3.5IN (90MM) FOAM ARMPAD, 14IN (355MM) LONG	2025-06-26
2D, 6	1005434	X-WIDE 3.5IN (90MM) GEL ARMPAD, 14IN (355MM) LONG	2025-06-26
2E, 6	1005435	X-WIDE 3.5IN (90MM) FOAM ARMPAD, 16IN (405MM) LONG	2025-06-26
2F, 6	1005436	X-WIDE 3.5IN (90MM) GEL ARMPAD, 16IN (405MM) LONG	2025-06-26
3A, 6	S-0119	FLAT ARMPAD DESK LENGTH [K0019]	2025-06-26
3B, 6	S-0120	FLAT ARMPAD FULL LENGTH [K0019]	2025-06-26
3C, 6	S-0123	FLAT GEL FOAM ARM PAD, DESK LENGTH [K0019]	2025-06-26
3D, 6	S-0124	FLAT GEL FOAM ARM PAD, FULL LENGTH [K0019]	2025-06-26
4A	1003631-L	KIT, MOUNT, TNBK, ENDO, RECL., 10.25-13.25 IN, LH	2025-06-26
4B	1003631-R	KIT, MOUNT, TNBK, ENDO, RECL., 10.25-13.25 IN, RH	2025-06-26
4C	1003633-L	KIT, MOUNT, TNBK, ENDO, RECL., 14.25-16.25 IN, LH	2025-06-26
4D	1003633-R	KIT, MOUNT, TNBK, ENDO, RECL., 14.25-16.25 IN, RH	2025-06-26
5A	1003623	KIT, CANTILEVER ARMREST EXTRUSION, 12IN (305MM),RH	2025-06-26
5B	1003624	KIT, CANTILEVER ARMREST EXTRUSION, 12IN (305MM),LH	2025-06-26
5C	1003625	KIT, CANTILEVER ARMREST EXTRUSION, 16IN (405MM),RH	2025-06-26
5D	1003626	KIT, CANTILEVER ARMREST EXTRUSION, 16IN (405MM),LH	2025-06-26
5E	1003629	KIT, CANTILEVER ARMREST EXTRUSION, 18IN (455MM),RH	2025-06-26
5F	1003630	KIT, CANTILEVER ARMREST EXTRUSION, 18IN (455MM),LH	2025-06-26
5G	1005360	KIT, CANTILEVER ARMREST EXTRUSION, 20IN (505MM),RH	2025-06-26
5H	1005365	KIT, CANTILEVER ARMREST EXTRUSION, 20IN (505MM),LH	2025-06-26
5I	1005361	KIT, CANTILEVER ARMREST EXTRUSION, 22IN (560MM),RH	2025-06-26
5J	1005364	KIT, CANTILEVER ARMREST EXTRUSION, 22IN (560MM),LH	2025-06-26

ITEM #	PART #	DESCRIPTION	EFFECTIVE
4B, 5A, 7-11, 12A, 13A,14,15A, 16A, 17-18	1005512	KIT, RECL ARMRST, VERT. POST, DESK,12IN (305MM),RH	2025-06-26
4A, 5B, 7-11, 12A, 13B,14,15A, 16A, 17-18	1005513	KIT, RECL ARMRST, VERT. POST, DESK,12IN (305MM),LH	2025-06-26
4B, 5C, 7-11, 12A, 13A,14,15A, 16A, 17-18	1005514	KIT, RECL ARMRST, VERT. POST, FULL,16IN (405MM),RH	2025-06-26
4A, 5D, 7-11, 12A, 13B,14,15A, 16A, 17-18	1005515	KIT, RECL ARMRST, VERT. POST, FULL,16IN (405MM),LH	2025-06-26
4B, 5E, 7-11, 12A, 13A,14,15A, 16A, 17-18	1005516	KIT, RECL ARMRST, VERT. POST, EXT.,18IN (455MM),RH	2025-06-26
4A, 5F, 7-11, 12A, 13B,14,15A, 16A, 17-18	1005517	KIT, RECL ARMRST, VERT. POST, EXT.,18IN (455MM),LH	2025-06-26
4B, 5G, 7-11, 12A, 13A,14,15A, 16A, 17-18	1005518	KIT, RECL ARMRST, VERT. POST, EXT.,20IN (505MM),RH	2025-06-26
4A, 5H, 7-11, 12A, 13B,14,15A, 16A, 17-18	1005519	KIT, RECL ARMRST, VERT. POST, EXT.,20IN (505MM),LH	2025-06-26
4B, 5I, 7-11, 12A, 13A,14,15A, 16A, 17-18	1005520	KIT, RECL ARMRST, VERT. POST, EXT.,22IN (560MM),RH	2025-06-26
4A, 5J, 7-11, 12A, 13B,14,15A, 16A, 17-18	1005521	KIT, RECL ARMRST, VERT. POST, EXT.,22IN (560MM),LH	2025-06-26
4B, 5A, 7-11, 12B, 13A,14,15A, 16A, 17-18	1005522	KIT, RECL ARMRST, VERT. POST, DESK,12IN (305MM),RH	2025-06-26
4A, 5B, 7-11, 12B, 13B,14,15A, 16A, 17-18	1005523	KIT, RECL ARMRST, VERT. POST, DESK,12IN (305MM),LH	2025-06-26
4B, 5C, 7-11, 12B, 13A,14,15A, 16A, 17-18	1005524	KIT, RECL ARMRST, VERT. POST, FULL,16IN (405MM),RH	2025-06-26
4A, 5D, 7-11, 12B, 13B,14,15A, 16A, 17-18	1005525	KIT, RECL ARMRST, VERT. POST, FULL,16IN (405MM),LH	2025-06-26
4B, 5E, 7-11, 12B, 13A,14,15A, 16A, 17-18	1005526	KIT, RECL ARMRST, VERT. POST, EXT.,18IN (455MM),RH	2025-06-26
4A, 5F, 7-11, 12B, 13B,14,15A, 16A, 17-18	1005527	KIT, RECL ARMRST, VERT. POST, EXT.,18IN (455MM),LH	2025-06-26
4B, 5G, 7-11, 12B, 13A,14,15A, 16A, 17-18	1005528	KIT, RECL ARMRST, VERT. POST, EXT.,20IN (505MM),RH	2025-06-26
4A, 5H, 7-11, 12B, 13B,14,15A, 16A, 17-18	1005529	KIT, RECL ARMRST, VERT. POST, EXT.,20IN (505MM),LH	2025-06-26
4B, 5I, 7-11, 12B, 13A,14,15A, 16A, 17-18	1005530	KIT, RECL ARMRST, VERT. POST, EXT.,22IN (560MM),RH	2025-06-26
4A, 5J, 7-11, 12B, 13B,14,15A, 16A, 17-18	1005531	KIT, RECL ARMRST, VERT. POST, EXT.,22IN (560MM),LH	2025-06-26
14, 15A, 16A	1005636	KIT, SEAT MNT, RECL ARMRST, VERT POST, ENDO 0", PR	2025-06-26
14, 15B, 16B	1005637	KIT, SEAT MNT, RECL ARMRST, VERT POST, ENDO 1", PR	2025-06-26
14, 15C, 16C	1005638	KIT, SEAT MNT, RECL ARMRST, VERT POST, ENDO 2", PR	2025-06-26

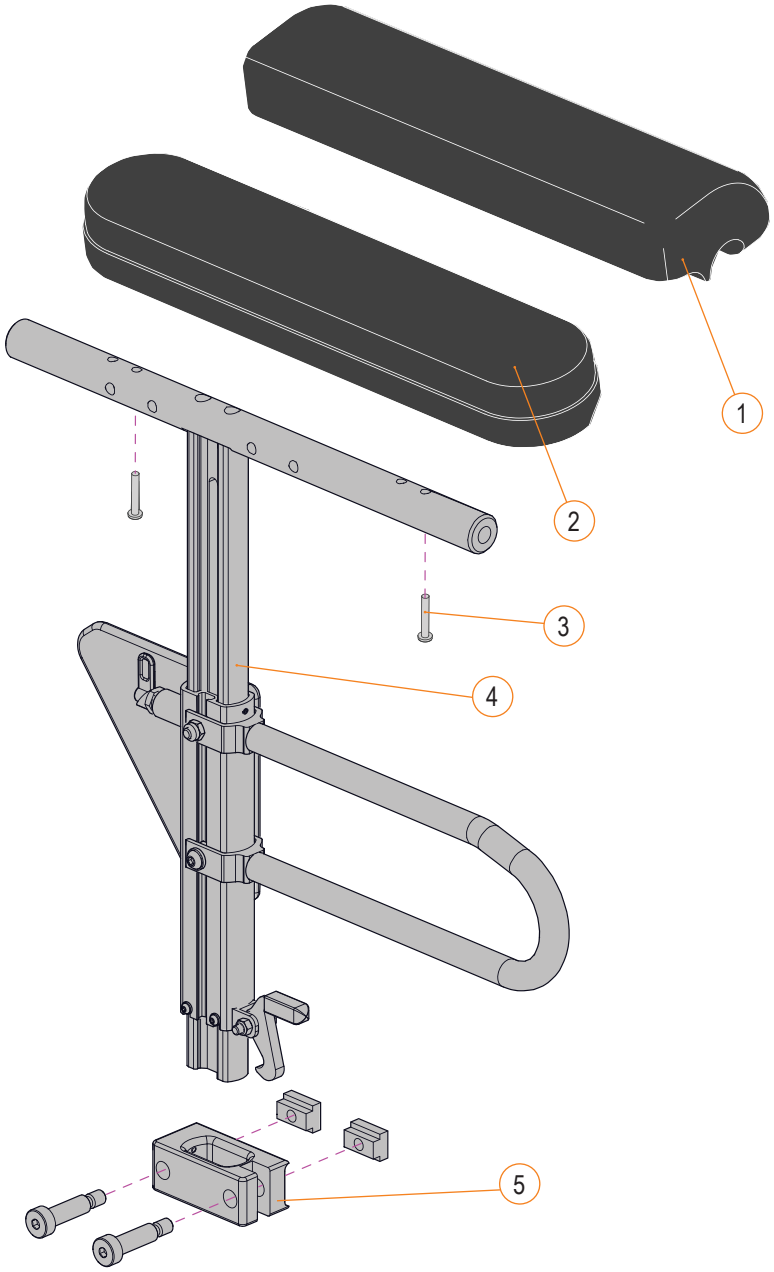

SINGLE POST ARMREST ASSEMBLY

ITEM #	PART #	DESCRIPTION	EFFECTIVE
1A,3	S-0121	WATERFALL ARM PAD, DESK LENGTH	2008-04-30
1B,3	S-0122	WATERFALL ARM PAD, FULL LENGTH	2008-04-30
1C,3	S-0125	WATERFALL GEL FOAM ARM PAD, DESK LENGTH	2008-04-30
1D,3	S-0126	WATERFALL GEL FOAM ARM PAD, FULL LENGTH	2008-04-30
2A,3	S-0119	FLAT ARM PAD, DESK LENGTH	2008-04-30
2B,3	S-0120	FLAT ARM PAD, FULL LENGTH	2008-04-30
2C,3	S-0123	FLAT GEL FOAM ARM PAD, DESK LENGTH	2008-04-30
2D,3	S-0124	FLAT GEL FOAM ARM PAD, FULL LENGTH	2008-04-30
4A	1003055	SINGLE POST ARMREST, SHORT, LEFT, LOW PROFILE	2021-05-07
4B	1003056	SINGLE POST ARMREST, SHORT, RIGHT, LOW PROFILE	2021-05-07
4C	1003057	SINGLE POST ARMREST, SHORT, LEFT, HIGH PROFILE	2021-05-07
4D	1003059	SINGLE POST ARMREST, SHORT, RIGHT, HIGH PROFILE	2021-05-07
4E	1003593	SINGLE POST ARMREST, LONG, LEFT, LOW PROFILE	2021-05-07
4F	1003594	SINGLE POST ARMREST, LONG, RIGHT, LOW PROFILE	2021-05-07
4G	1003595	SINGLE POST ARMREST, LONG, LEFT, HIGH PROFILE	2021-05-07
4H	1003596	SINGLE POST ARMREST, LONG, RIGHT, HIGH PROFILE	2021-05-07
5	1003054	SINGLE POST ARMREST, RECEPTACLE	2021-05-07

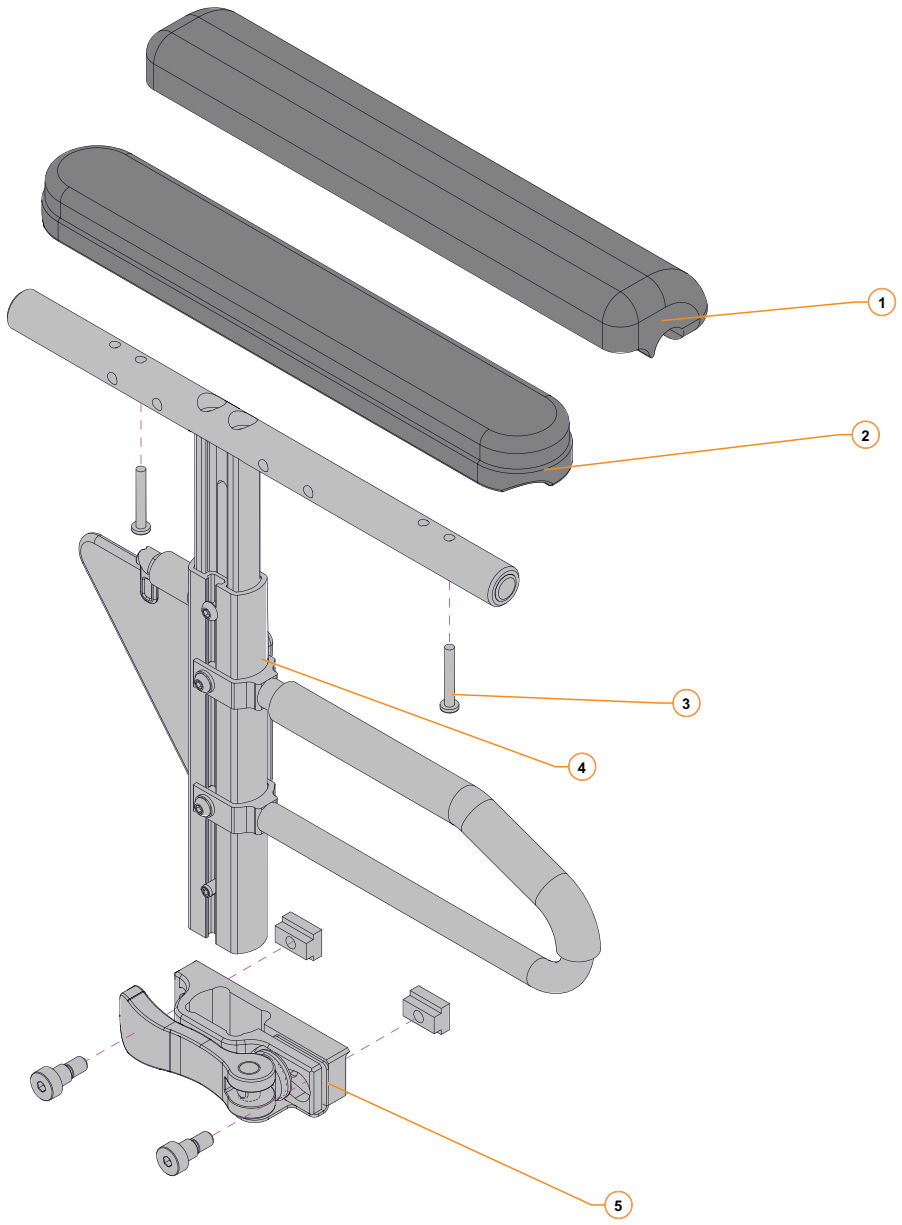

SINGLE POST ARMREST ASSEMBLY

ITEM #	PART #	DESCRIPTION	EFFECTIVE
1A,3	S-0121	WATERFALL ARM PAD, DESK LENGTH	2008-04-30
1B,3	S-0122	WATERFALL ARM PAD, FULL LENGTH	2008-04-30
1C,3	S-0125	WATERFALL GEL FOAM ARM PAD, DESK LENGTH	2008-04-30
1D,3	S-0126	WATERFALL GEL FOAM ARM PAD, FULL LENGTH	2008-04-30
2A,3	S-0119	FLAT ARM PAD, DESK LENGTH	2008-04-30
2B,3	S-0120	FLAT ARM PAD, FULL LENGTH	2008-04-30
2C,3	S-0123	FLAT GEL FOAM ARM PAD, DESK LENGTH	2008-04-30
2D,3	S-0124	FLAT GEL FOAM ARM PAD, FULL LENGTH	2008-04-30
4A	1004596	SINGLE POST ARMREST, SHORT, LEFT, LOW PROFILE	2023-12-01
4B	1004597	SINGLE POST ARMREST, SHORT, RIGHT, LOW PROFILE	2023-12-01
4C	1004598	SINGLE POST ARMREST, SHORT, LEFT, HIGH PROFILE	2023-12-01
4D	1004599	SINGLE POST ARMREST, SHORT, RIGHT, HIGH PROFILE	2023-12-01
4E	1004600	SINGLE POST ARMREST, LONG, LEFT, LOW PROFILE	2023-12-01
4F	1004601	SINGLE POST ARMREST, LONG, RIGHT, LOW PROFILE	2023-12-01
4G	1004602	SINGLE POST ARMREST, LONG, LEFT, HIGH PROFILE	2023-12-01
4H	1004603	SINGLE POST ARMREST, LONG, RIGHT, HIGH PROFILE	2023-12-01
5A	1004696	SINGLE POST ARMREST, RECEPTACLE, LEFT	2023-12-01
5B	1004697	SINGLE POST ARMREST, RECEPTACLE, RIGHT	2023-12-01

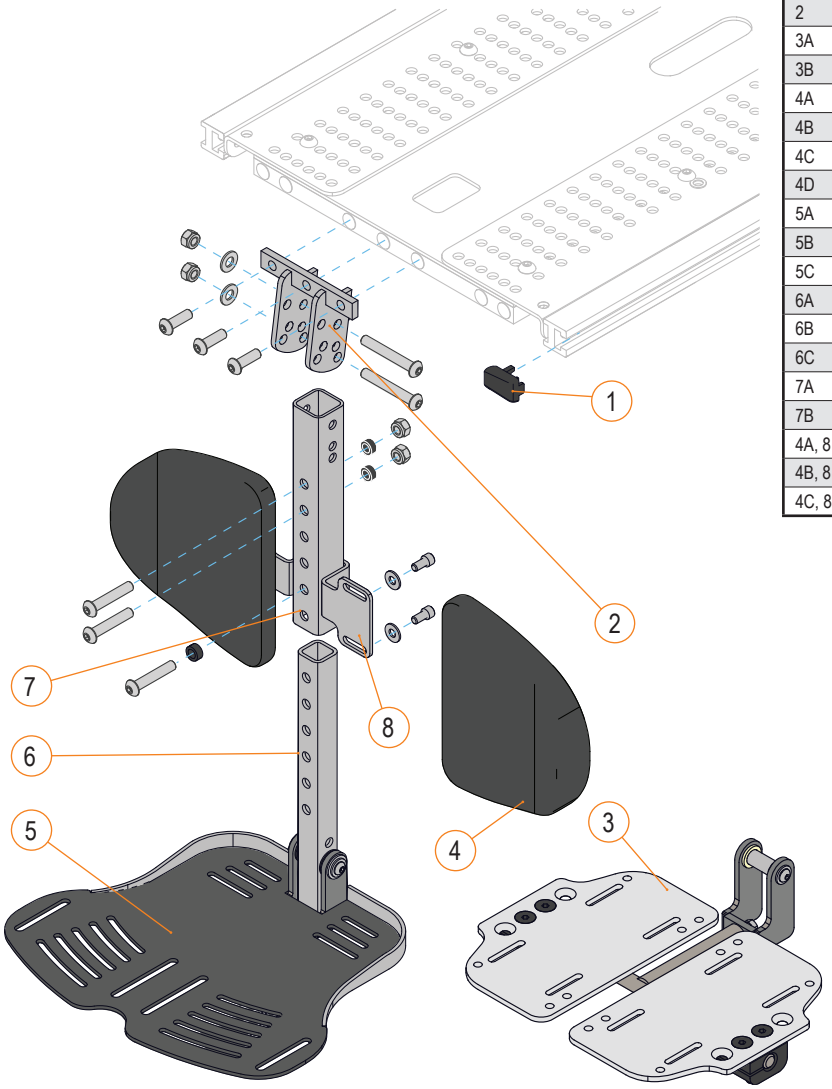

90° FIXED CENTER MOUNT FOOT BOARD			
ITEM #	PART #	DESCRIPTION	PRIOR TO
1	1001061	PROTECTIVE END-CAP, SEAT RAIL	2022-03-14
2	A3260	ADJUSTABLE TOP MOUNT	2015-03-05
3A	C-92191	S SPLIT FOOTPLATE 280 MM (11IN) W X 205 MM (8IN) D	2015-03-05
3B	C-92192	M SPLIT FOOTPLATE 330 MM (13IN) W X 205 MM (8IN) D	2015-03-05
4A	H00112	CALF PAD, SMALL, 130 MM X 155 MM (5 IN X 6 IN)	2015-03-05
4B	H00111	CALF PAD, MEDIUM, 155 MM X 180 MM (6 IN X 7 IN)	2015-03-05
4C	H00113	CALF PAD, LARGE, 205 MM X 180 MM (8 IN X 7 IN)	2015-03-05
4D	H00114	CALF PAD, EXTRA LARGE, 155 MM X 180 MM (10 IN X 8 IN)	2015-03-05
5A	C-9228	FOOTBOARD, SMALL, 305 MM FRONT WIDE X 255 MM DEPTH (12 IN X 10 IN)	2015-03-05
5B	C-92176	FOOTBOARD, MEDIUM, 330 MM FRONT WIDE X 255 MM DEPTH (13 IN X 10 IN)	2015-03-05
5C	C-92154	FOOTBOARD, LARGE, 380 MM FRONT WIDE X 255 MM DEPTH (15 IN X 10 IN)	2015-03-05
6A	A9283	FIXED CENTER MOUNT LOWER TUBE, 193 MM TO 318 MM (7.5 IN-12.5 IN) LENGTH	2015-03-05
6B	A9287	FIXED CENTER MOUNT LOWER TUBE, 318 MM TO 420 MM (12.5 IN-16.5 IN) LENGTH	2015-03-05
6C	A9288	FIXED CENTER MOUNT LOWER TUBE, 420 MM TO 520 MM (16.5 IN-20.5 IN) LENGTH	2015-03-05
7A	A9284	FIXED CENTER MOUNT UPPER TUBE, 318 MM TO 420 MM (12.5 IN-16.5 IN) LENGTH	2015-03-05
7B	A9285	FIXED CENTER MOUNT UPPER TUBE, 420 MM TO 520 MM (16.5 IN-20.5 IN) LENGTH	2015-03-05
4A, 8	C-92136	CALF PAD ASSEMBLY, 280 MM TO 510 MM (11 IN-20 IN) WIDE	2018-12-10
4B, 8	C-92143	CALF PAD ASSEMBLY, 535 MM TO 610 MM (21 IN-24 IN) WIDE	2018-12-10
4C, 8	C-92144	CALF PAD ASSEMBLY, 610 MM TO 710 MM (24 IN-28 IN) WIDE	2018-12-10

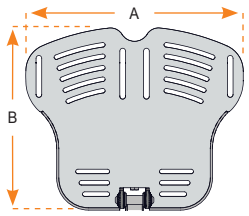

	A	B
S	12 in / 305 mm	10 in / 254 mm
M	13 in / 330 mm	10 in / 254 mm
L	15 in / 381 mm	10 in / 254 mm

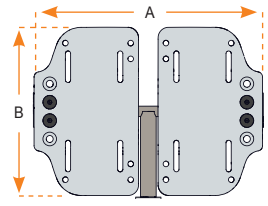

	A	B
S	11 in / 280 mm	8 in / 203 mm
M	13 in / 330 mm	8 in / 203 mm

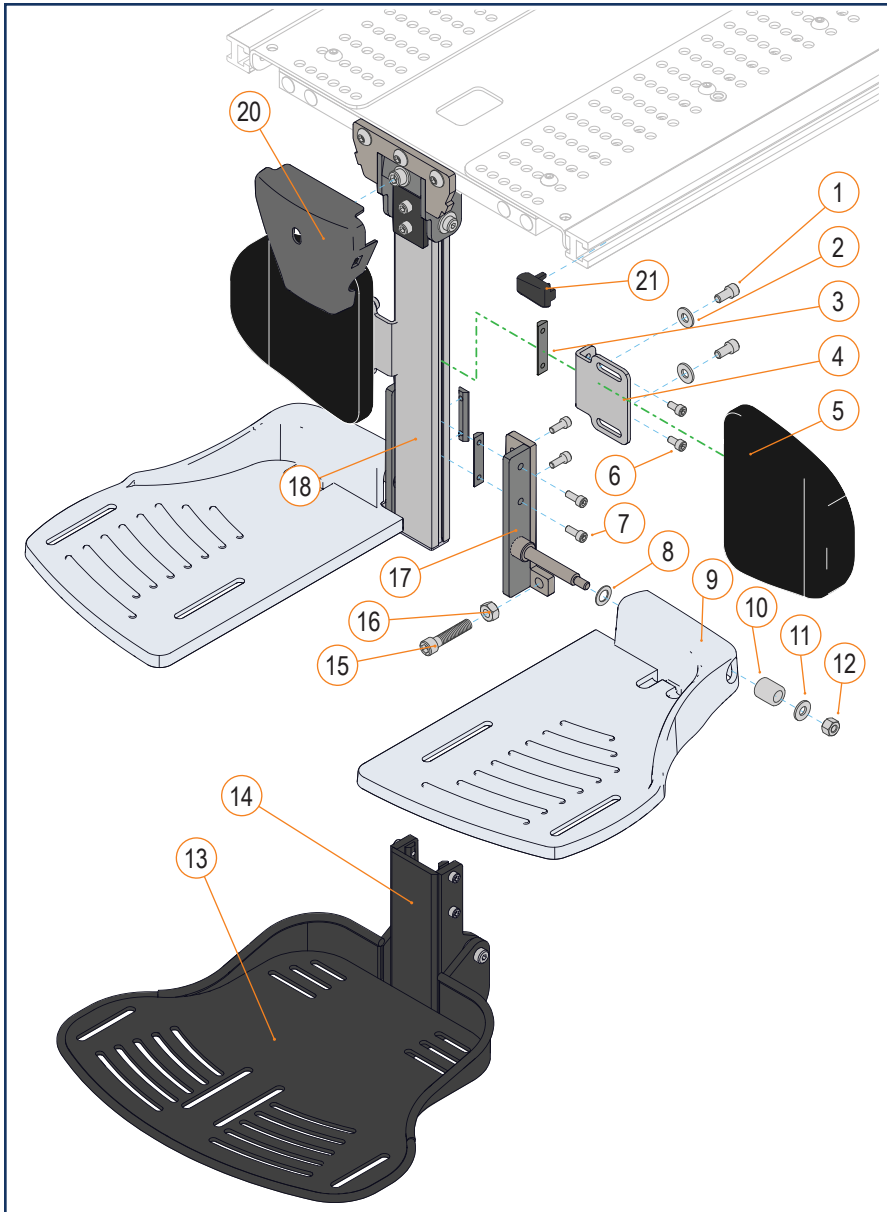

90° FIXED CENTER MOUNT FOOTBOARD

ITEM #	PART #	DESCRIPTION	EFFECTIVE
5A	H00112	CALF PAD, SMALL, 130 MM X 155 MM (5 IN X 6 IN)	2015-04-13
5B	H00111	CALF PAD, MEDIUM, 155 MM X 180 MM (6 IN X 7 IN)	2015-04-13
5C	H00113	CALF PAD, LARGE, 205 MM X 180 MM (8 IN X 7 IN)	2015-04-13
5D	H00114	CALF PAD, EXTRA LARGE, 155 MM X 180 MM (10 IN X 8 IN)	2015-04-13
9A	A92214	CENTER MOUNT SPLIT FOOTPLATE, SMALL, LEFT HAND	2015-03-05
9B	A92213	CENTER MOUNT SPLIT FOOTPLATE, SMALL, RIGHT HAND	2015-03-05
9C	A92212	CENTER MOUNT SPLIT FOOTPLATE, MEDIUM, LEFT HAND	2015-03-05
9D	A92211	CENTER MOUNT SPLIT FOOTPLATE, MEDIUM, RIGHT HAND	2015-03-05
9E	A92209	CENTER MOUNT SPLIT FOOTPLATE, LARGE, LEFT HAND	2015-03-05
9F	A92208	CENTER MOUNT SPLIT FOOTPLATE, LARGE, RIGHT HAND,	2015-03-05
13A	S-0147	SMALL CENTER MOUNT FIXED FOOTBOARD	2018-12-19
13B	S-0148	MEDIUM CENTER MOUNT FIXED FOOTBOARD	2018-12-19
13C	S-0149	LARGE CENTER MOUNT FIXED FOOTBOARD	2018-12-19
14	S-0085	CENTER MOUNT FIXED FOOTBOARD MOUNTING HARDWARE KIT	2017-03-01
1-4, 6	S-0084	CALF PAD BRACKET ASSEMBLY	2015-04-13
7, 8, 10A, 11, 12, 15, 16, 17A	S-0080	CENTER MOUNT FOOTPLATE KIT, SMALL, LEFT HAND, ANGLE ADJUSTABLE	2015-03-05
7, 8, 10A, 11, 12, 15, 16, 17B	S-0082	CENTER MOUNT FOOTPLATE KIT, SMALL, RIGHT HAND, ANGLE ADJUSTABLE	2015-03-05
7, 8, 10B, 11, 12, 15, 16, 17A	S-0081	CENTER MOUNT FOOTPLATE KIT, MEDIUM-LARGE, LEFT HAND, ANGLE ADJUSTABLE	2015-03-05
7, 8, 10B, 11, 12, 15, 16, 17B	S-0083	CENTER MOUNT FOOTPLATE KIT, MEDIUM-LARGE, RIGHT HAND, ANGLE ADJUSTABLE	2015-03-05
18A, 20	S-0086	FIXED CENTER MOUNT FOOTBOARD, 193 MM TO 318 MM (7.5 IN-12.5 IN) LENGTH	2015-03-05
18B, 20	S-0087	FIXED CENTER MOUNT FOOTBOARD, 318 MM TO 420 MM (12.5 IN-16.5 IN) LENGTH	2015-03-05
18C, 20	S-0088	FIXED CENTER MOUNT FOOTBOARD, 420 MM TO 495 MM (16.5 IN-19.5 IN) LENGTH	2015-03-05
20	A92222	COVER, CENTRAL LEGREST	2024-08-19
21	1001061	PROTECTIVE END-CAP, SEAT RAIL	2022-03-14

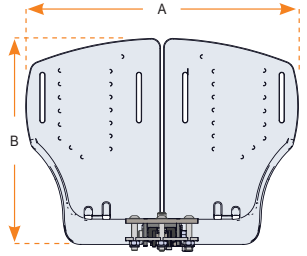

	A	B
S	12 in / 305 mm	10 in / 254 mm
M	13.5 in / 343 mm	10 in / 254 mm
L	15 in / 381 mm	10 in / 254 mm

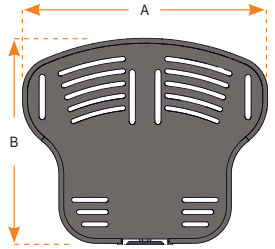

	A	B
S	12.375 in / 314 mm	10.25 in / 260 mm
M	13.625 in / 346 mm	10.25 in / 260 mm
L	15.625 in / 397 mm	10.25 in / 260 mm

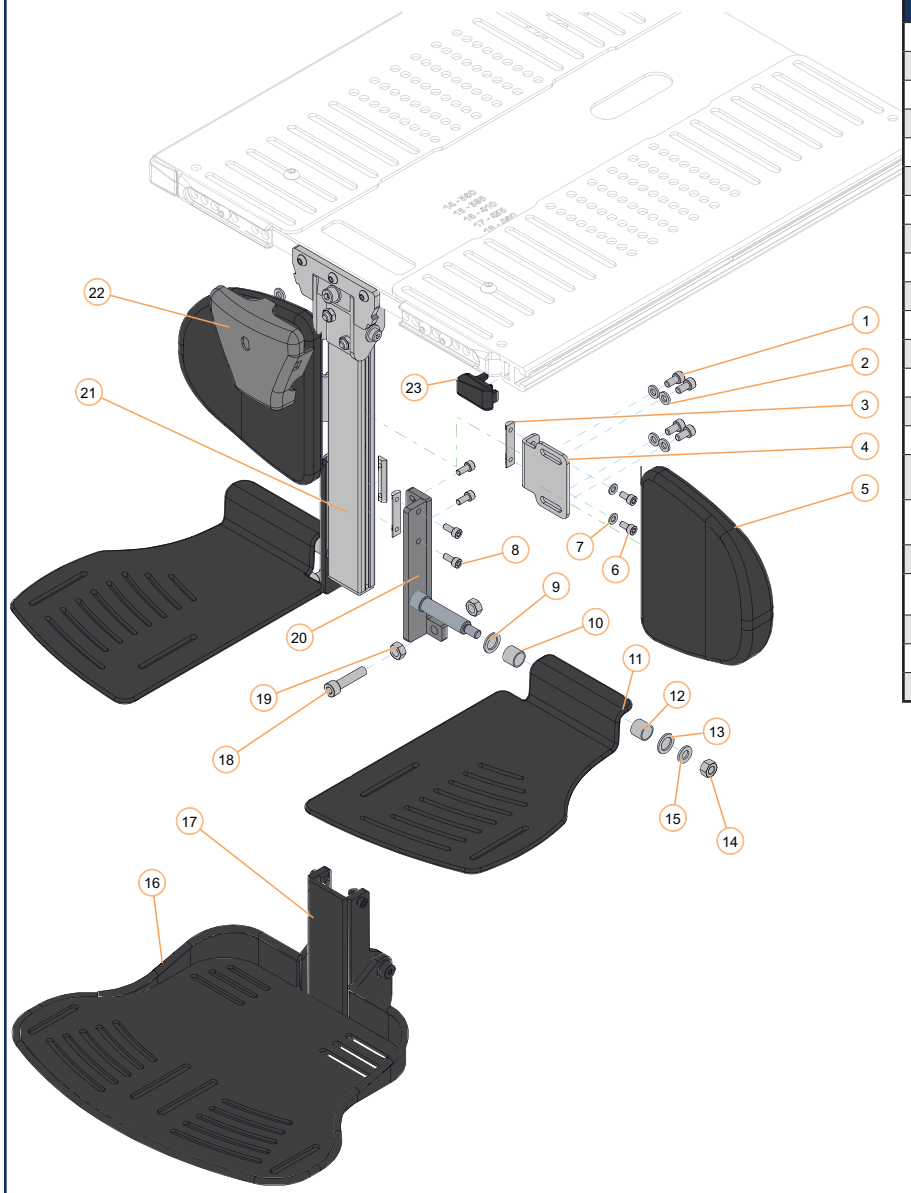

90° FIXED CENTER MOUNT FOOTBOARD			
ITEM #	PART #	DESCRIPTION	EFFECTIVE
1,2,5A	H00112	CALF PAD, S, 130MM X 155MM (5IN X 6IN)	2015-04-13
1,2,5B	H00111	CALF PAD, M, 155MM X 180MM (6IN X 7IN)	2015-04-13
1,2,5C	H00113	CALF PAD, L, 205MM X 180MM (8IN X 7IN)	2015-04-13
1,2,5D	H00114	CALF PAD, EXTRA-L, 155X180MM (10IN X 8IN)	2015-04-13
11A	1004335	FOOTPLATE ASSEMBLY, SMALL, RH	2024-08-20
11B	1004336	FOOTPLATE ASSEMBLY, SMALL, LH	2024-08-20
11C	1004337	FOOTPLATE ASSEMBLY, MEDIUM,RH	2024-08-20
11D	1004338	FOOTPLATE ASSEMBLY, MEDIUM, LH	2024-08-20
11E	1004339	FOOTPLATE ASSEMBLY, LARGE, RH	2024-08-20
11F	1004340	FOOTPLATE ASSEMBLY, LARGE, LH	2024-08-20
16A	S-0147	SMALL CENTER MOUNT FIXED FOOTBOARD	2024-08-20
16B	S-0148	MEDIUM CENTER MOUNT FIXED FOOTBOARD	2024-08-20
16C	S-0149	LARGE CENTER MOUNT FIXED FOOTBOARD	2024-08-20
17	S-0085	CENTER MOUNT FIXED FOOTPLATE MOUNTING HARDWARE KIT	2024-08-20
3,4,6,7	S-0084	CALF PAD BRACKET ASSEMBLY	2015-04-13
8,9,10,12, 13,14,15,18,19,20A	1004517	KIT, HEIGHT & ANGLE ADJ. BKT, CTR MNT FTPLATE, LH	2024-08-20
8,9,10,12, 13,14,15,18,19,20B	1004518	KIT, HEIGHT & ANGLE ADJ. BKT, CTR MNT FTPLATE, RH	2024-08-20
21A, 22	S-0086	FIXED CTR MNT FOOTBOARD 216 TO 318MM (8.5-12.5IN)	2015-03-05
21B, 22	S-0087	SUPPORT CENTRALE FIXE A 90°, LONGUEUR 318MM (12.5IN) A 420MM (16.5IN)	2015-03-05
21C, 22	S-0088	FIXED CTR MNT FOOTBOARD 420 TO 495MM (16.5-19.5IN)	2015-03-05
22	A922z22	COVER, CENTRAL LEGREST	2018-09-17
23	1001061	PROTECTIVE END-CAP, SEAT RAIL	2015-03-05

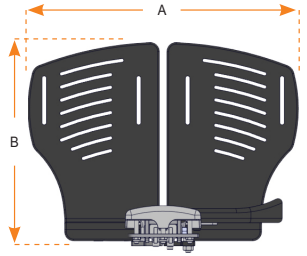

	A	B
S	12 in / 305 mm	10 in / 254 mm
M	13.5 in / 343 mm	10 in / 254 mm
L	15 in / 381 mm	10 in / 254 mm

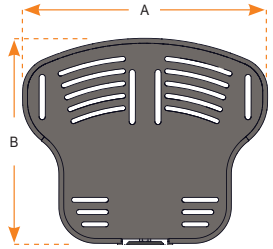

	A	B
S	12.375 in / 314 mm	10.25 in / 260 mm
M	13.625 in / 346 mm	10.25 in / 260 mm
L	15.625 in / 397 mm	10.25 in / 260 mm

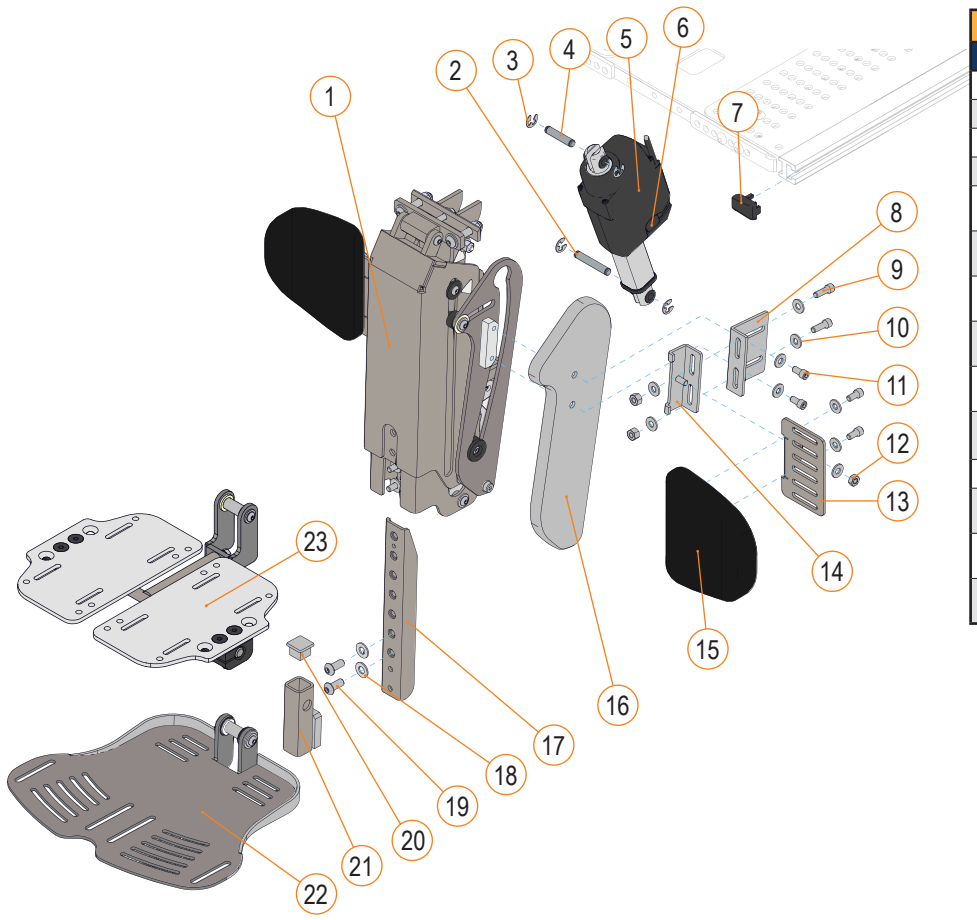

POWER ELEVATING CENTRE MOUNT FOOTBOARD

ITEM #	PART #	DESCRIPTION	Prior to
7	1001061	PROTECTIVE END-CAP, SEAT RAIL	2022-03-14
15A	H00112	CALF PAD, SMALL, 130 MM X 155 MM (5 IN X 6 IN)	2018-12-10
15B	H00111	CALF PAD, MEDIUM, 155 MM X 180 MM (6 IN X 7 IN)	2018-12-10
15C	H00113	CALF PAD, LARGE, 205 MM X 180 MM (8 IN X 7 IN)	2018-12-10
15D	H00114	CALF PAD, EXTRA LARGE, 155 MM X 180 MM (10 IN X 8 IN)	2018-12-10
22A	C-9228	FOOTBOARD, SMALL, 305 MM FRONT WIDE X 255 MM DEPTH (12 IN X 10 IN)	2018-12-10
22B	C-92176	FOOTBOARD, MEDIUM, 330 MM FRONT WIDE X 255 MM DEPTH (13 IN X 10 IN)	2018-12-10
22C	C-92154	FOOTBOARD, LARGE, 380 MM FRONT WIDE X 255 MM DEPTH (15 IN X 10 IN)	2018-12-10
223A	C-92191	SPLIT FOOTPLATE, SMALL, 305 MM WIDE X 255 MM DEPTH (12 IN X 10 IN)	2018-12-10
23B	C-92192	SPLIT FOOTPLATE, LARGE, 380 MM WIDE X 255 MM DEPTH (15 IN X 10 IN)	2018-12-10
5B,6	R00046	ACTUATOR, STROKE 115 MM 1500N	2018-12-10
1-4,5B,6,8-14,15A, 16A,16B,17A,18-21	S-0145	POWER FOOTBOARD 450 LB FOR STANDER	2018-12-10
17A,18,17,20-21	S-0143	POWER ELEVATING CENTRE MOUNT ADJUSTABLE RANGE 265 MM-405 MM (10.5 IN-16 IN)	2018-12-10
17B,18,19	S-0144	POWER ELEVATING CENTRE MOUNT ADJUSTABLE RANGE 420 MM-520 MM (16.5 IN-20.5 IN)	2018-12-10

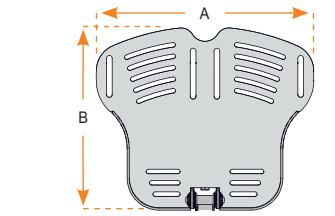

	A	B
S	12 in / 305 mm	10 in / 254 mm
M	13 in / 330 mm	10 in / 254 mm
L	15 in / 381 mm	10 in / 254 mm

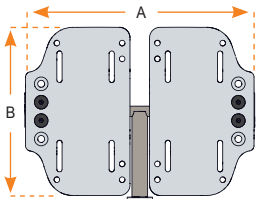

	A	B
S	11 in / 280 mm	8 in / 203 mm
M	13 in / 330 mm	8 in / 203 mm

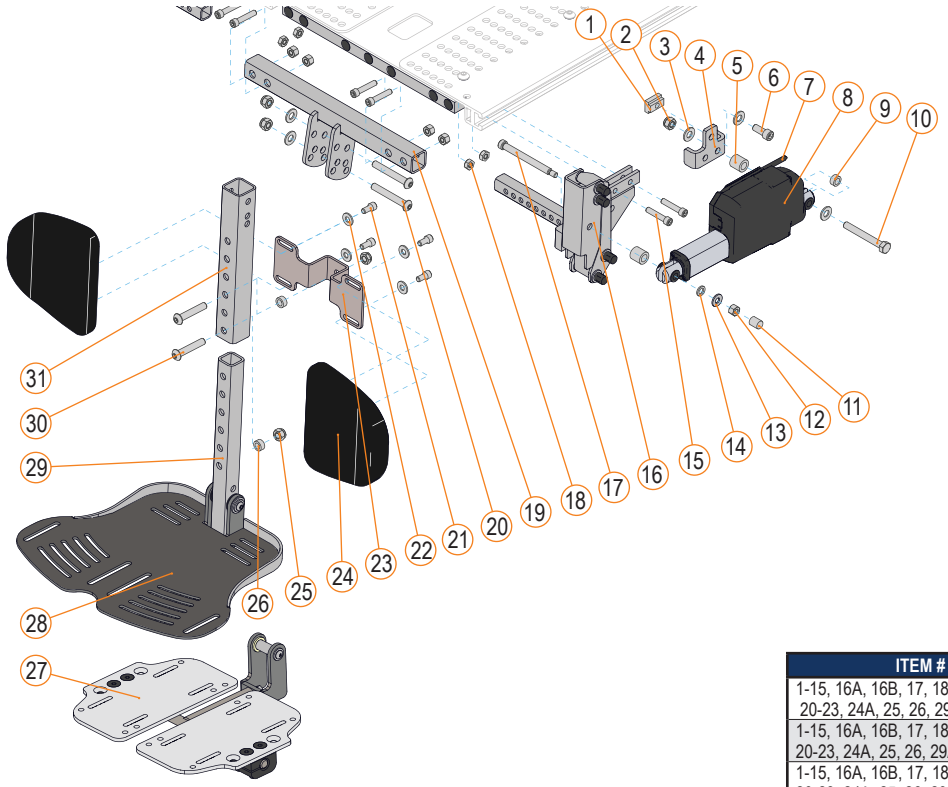

VHD POWER ELEVATING CENTRE MOUNT FOOTBOARD

ITEM #	PART #	DESCRIPTION	PRIOR TO
7	D00283	LA23 ACTUATOR CABLE	2018-12-10
16A	C-9266	VHD FOOTBOARD ARTICULATION, LEFT HAND	2018-12-10
16B	C-9267	VHD FOOTBOARD ARTICULATION, RIGHT HAND	2018-12-10
19A	A9265	TOP CROSS BAR, 380 MM TO 505 MM (15 IN-20 IN) WIDE	2018-12-10
19B	A9268	TOP CROSS BAR, 480 MM TO 610 MM (19 IN-24 IN) WIDE	2018-12-10
19C	A92188	TOP CROSS BAR, 610 MM TO 710 MM (24 IN-28 IN) WIDE	2018-12-10
24A	H00112	CALF PAD, SMALL, 130 MM X 155 MM (5 IN X 6 IN)	2018-12-10
24B	H00111	CALF PAD, MEDIUM, 155 MM X 180 MM (6 IN X 7 IN)	2018-12-10
24C	H00113	CALF PAD, LARGE, 205 MM X 180 MM (8 IN X 7 IN)	2018-12-10
24D	H00114	CALF PAD, EXTRA LARGE, 155 MM X 180 MM (10 IN X 8 IN)	2018-12-10
27A	C-92191	SPLIT FOOTPLATE, SMALL, 305 MM WIDE X 255 MM DEPTH (12 IN X 10 IN)	2018-12-10
27B	C-92192	SPLIT FOOTPLATE, LARGE, 380 MM WIDE X 255 MM DEPTH (15 IN X 10 IN)	2018-12-10
28A	C-9228	FOOTBOARD, SMALL, 305 MM FRONT WIDE X 255 MM DEPTH (12 IN X 10 IN)	2018-12-10
28B	C-92176	FOOTBOARD, MEDIUM, 330 MM FRONT WIDE X 255 MM DEPTH (13 IN X 10 IN)	2018-12-10
28C	C-92154	FOOTBOARD, LARGE, 380 MM FRONT WIDE X 255 MM DEPTH (15 IN X 10 IN)	2018-12-10
29A	A9287	FIXED CENTER MOUNT LOWER TUBE, 380 MM TO 485 MM (15 IN-19 IN)	2018-12-10
29B	A9288	FIXED CENTER MOUNT LOWER TUBE, 485 MM TO 585 MM (19 IN-23 IN)	2018-12-10
29C	A9290	FIX CENTER MOUNT LOWER ANGLE TUBE, 380 MM TO 485 MM (15 IN-19 IN)	2018-12-10
29D	A9292	FIX CENTER MOUNT LOWER ANGLE TUBE, 485 MM TO 585 MM (19 IN-23 IN)	2018-12-10
31A	A9284	FIXED CENTER MOUNT UPPER TUBE, 380 MM TO 485 MM (15 IN-19 IN)	2018-12-10
31B	A9285	FIXED CENTER MOUNT UPPER TUBE, 485 MM TO 585 MM (19 IN-23 IN)	2018-12-10
31C	A9291	FIX CENTER MOUNT UPPER ANGLE TUBE, 485 MM TO 585 MM (19 IN-23 IN)	2018-12-10
7, 8	R00046	ACTUATOR, STROKE 115 MM 1500N	2018-12-10
23, 24A	C-92136	CALF PAD ASSEMBLY, 280 MM TO 510 MM (11 IN-20 IN) WIDE	2018-12-10
23, 24B	C-92143	CALF PAD ASSEMBLY, 535 MM TO 610 MM (21 IN-24 IN) WIDE	2018-12-10
23, 24C	C-92144	CALF PAD ASSEMBLY, 610 MM TO 710 MM (24 IN-28 IN) WIDE	2018-12-10

ITEM #	PART #	DESCRIPTION	PRIOR TO
1-15, 16A, 16B, 17, 18, 19A, 20-23, 24A, 25, 26, 29A, 30, 31A	C-92160	VHD POWER FB, 380 MM TO 485 MM (15 IN-19 IN) LENGTH, 380 MM TO 505 MM (15 IN-20 IN) WIDE	2018-12-10
1-15, 16A, 16B, 17, 18, 19B, 20-23, 24A, 25, 26, 29A, 30, 31A	C-92162	VHD POWER FB, 380 MM TO 485 MM (15 IN-19 IN) LENGTH, 480 MM TO 610 MM (19 IN-24 IN) WIDE	2018-12-10
1-15, 16A, 16B, 17, 18, 19C, 20-23, 24A, 25, 26, 29A, 30, 31A	C-92193	VHD POWER FB, 380 MM TO 485 MM (15 IN-19 IN) LENGTH, 610 MM TO 710 MM (24 IN-28 IN) WIDE	2018-12-10
1-15, 16A, 16B, 17, 18, 19A, 20-23, 24A, 25, 26, 29B, 30, 31B	C-92161	VHD POWER FB, 485 MM TO 585 MM (19 IN-23 IN) LENGTH, 380 MM TO 505 MM (15 IN-20 IN) WIDE	2018-12-10
1-15, 16A, 16B, 17, 18, 19B, 20-23, 24A, 25, 26, 29B, 30, 31B	C-92163	VHD POWER FB, 485 MM TO 585 MM (19 IN-23 IN) LENGTH, 480 MM TO 610 MM (19 IN-24 IN) WIDE	2018-12-10
1-15, 16A, 16B, 17, 18, 19C, 20-23, 24A, 25, 26, 29B, 30, 31B	C-92194	VHD POWER FB, 485 MM TO 585 MM (19 IN-23 IN) LENGTH, 610 MM TO 710 MM (24 IN-28 IN) WIDE	2018-12-10
1-15, 16A, 16B, 17, 18, 19A, 20-23, 24A, 25, 26, 29C, 30	C-92164	VHD POWER ANGLE FB, 380 MM TO 485 MM (15 IN-19 IN) LENGTH, 380 MM TO 505 MM (15 IN-20 IN) WIDE	2018-12-10
1-15, 16A, 16B, 17, 18, 19B, 20-23, 24A, 25, 26, 29C, 30	C-92166	VHD POWER ANGLE FB, 380 MM TO 485 MM (15 IN-19 IN) LENGTH, 480 MM TO 610 MM (19 IN-24 IN) WIDE	2018-12-10
1-15, 16A, 16B, 17, 18, 19C, 20-23, 24A, 25, 26, 29C, 30	C-92195	VHD POWER ANGLE FB, 380 MM TO 485 MM (15 IN-19 IN) LENGTH, 610 MM TO 710 MM (24 IN-28 IN) WIDE	2018-12-10
1-15, 16A, 16B, 17, 18, 19A, 20-23, 24A, 25, 26, 29C, 30, 31C	C-92165	VHD POWER ANGLE FB, 485 MM TO 585 MM (19 IN-23 IN) LENGTH, 380 MM TO 505 MM (15 IN-20 IN) WIDE	2018-12-10
1-15, 16A, 16B, 17, 18, 19B, 20-23, 24A, 25, 26, 29C, 30, 31C	C-92167	VHD POWER ANGLE FB, 485 MM TO 585 MM (19 IN-23 IN) LENGTH, 480 MM TO 610 MM (19 IN-24 IN) WIDE	2018-12-10
1-15, 16A, 16B, 17, 18, 19C, 20-23, 24A, 25, 26, 29C, 30, 31C	C-92196	VHD POWER ANGLE FB, 485 MM TO 585 MM (19 IN-23 IN) LENGTH, 610 MM TO 71 0MM (24 IN-28 IN) WIDE	2018-12-10

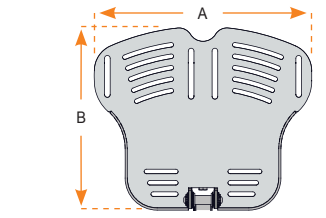

	A	B
S	12 in / 305 mm	10 in / 254 mm
M	13 in / 330 mm	10 in / 254 mm
L	15 in / 381 mm	10 in / 254 mm

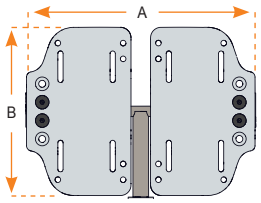

	A	B
S	11 in / 280 mm	8 in / 203 mm
M	13 in / 330 mm	8 in / 203 mm

POWER ELEVATING AND ARTICULATING CENTER MOUNT FOOT PLATFORM

SEE DESCRIPTION ON FOLLOWING PAGE

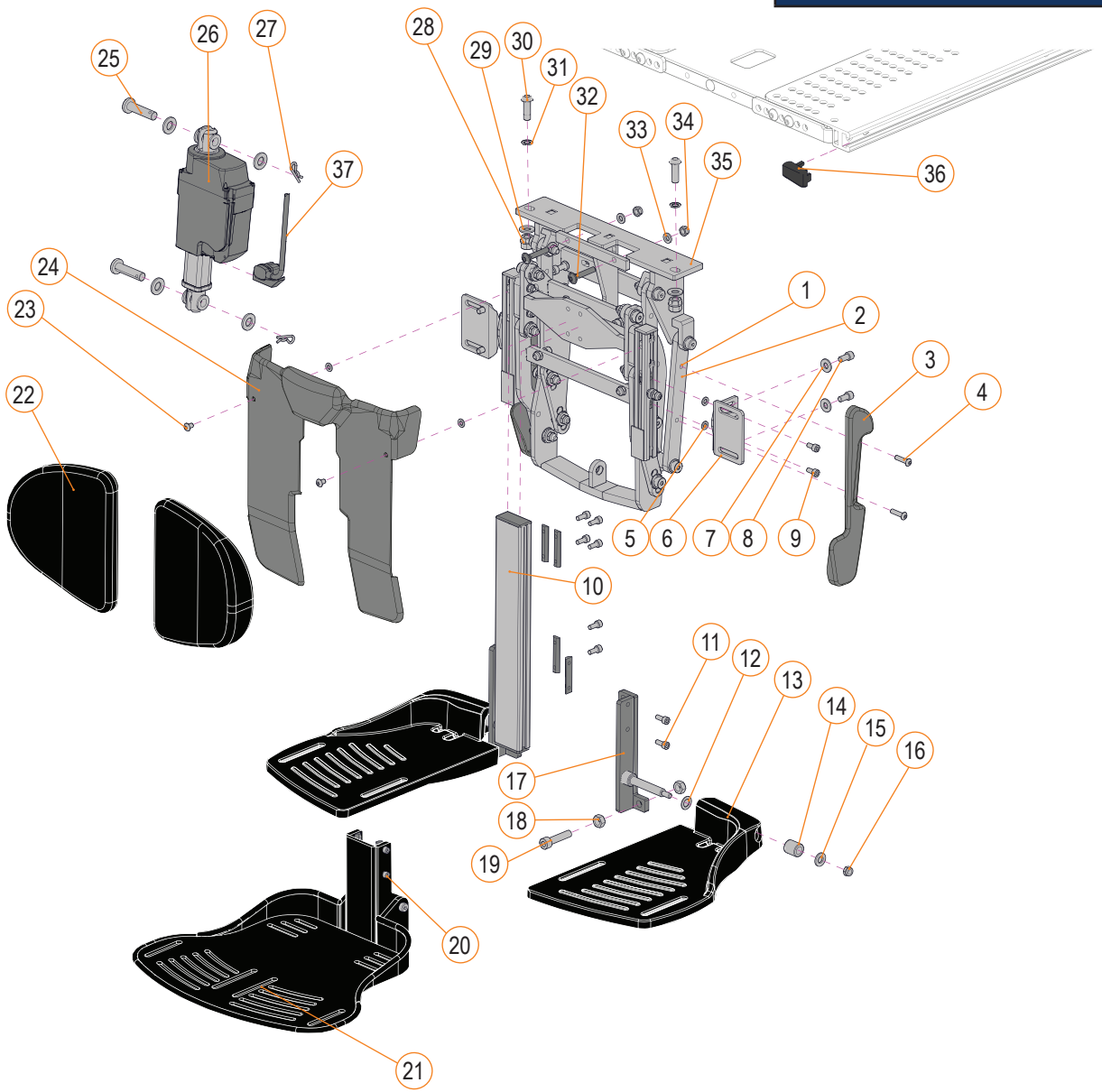

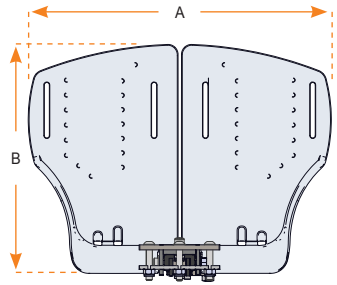

	A	B
S	12 in / 305 mm	10 in / 254 mm
M	13.5 in / 343 mm	10 in / 254 mm
L	15 in / 381 mm	10 in / 254 mm

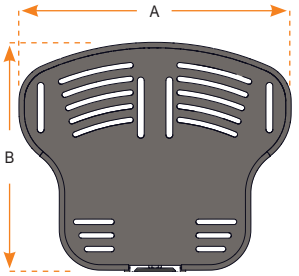

	A	B
S	12.375 in / 314 mm	10.25 in / 260 mm
M	13.625 in / 346 mm	10.25 in / 260 mm
L	15.625 in / 397 mm	10.25 in / 260 mm

POWER ELEVATING AND ARTICULATING CENTER MOUNT FOOT PLATFORM

ITEM #	PART #	DESCRIPTION	EFFECTIVE
1,2,3A,4	S-0136	POWER ELEVATING CENTER MOUNT, LEFT COVER	2018-12-10
1,2,3B,4	S-0137	POWER ELEVATING CENTER MOUNT, RIGHT COVER	2018-12-10
13A	A92214	CENTER MOUNT SPLIT FOOTPLATE, SMALL, LEFT HAND	2015-03-05
13B	A92213	CENTER MOUNT SPLIT FOOTPLATE, SMALL, RIGHT HAND	2015-03-05
13C	A92212	CENTER MOUNT SPLIT FOOTPLATE, MEDIUM, LEFT HAND	2015-03-05
13D	A92211	CENTER MOUNT SPLIT FOOTPLATE, MEDIUM, RIGHT HAND	2015-03-05
13E	A92209	CENTER MOUNT SPLIT FOOTPLATE, LARGE, LEFT HAND	2015-03-05
13F	A92208	CENTER MOUNT SPLIT FOOTPLATE, LARGE, RIGHT HAND	2015-03-05
20	S-0085	CENTER MOUNT FIXED FOOTPLATE MOUNTING HARDWARE KIT	2017-03-01
21A	S-0147	CENTER MOUNT FIXED FOOTBOARD, SMALL	2017-03-01
21B	S-0148	CENTER MOUNT FIXED FOOTBOARD, MEDIUM	2017-03-01
21C	S-0149	CENTER MOUNT FIXED FOOTBOARD, LARGE	2017-03-01
5-9	S-0130	CALF PADS SUPPORT BRAKETS FOR POWER ELEVATING CENTER MOUNT	2018-12-10
11,12,14A,15, 16,17A,18,19	S-0080	CENTER MOUNT FOOTPLATE KIT, SMALL, LEFT HAND, ANGLE ADJUSTABLE	2015-03-05
11,12,14A,15, 16,17B,18,19	S-0082	CENTER MOUNT FOOTPLATE KIT, SMALL, RIGHT HAND, ANGLE ADJUSTABLE	2015-03-05
11,12,14B,15, 16,17A,18,19	S-0081	CENTER MOUNT FOOTPLATE KIT, MEDIUM-LARGE, LEFT HAND, ANGLE ADJUSTABLE	2015-03-05
11,12,14B,15, 16,17B,18,19	S-0083	CENTER MOUNT FOOTPLATE KIT, MEDIUM-LARGE, RIGHT HAND, ANGLE ADJUSTABLE	2015-03-05
22A	H00112	CALF PAD, SMALL, 130 MM X 155 MM (5 IN X 6 IN)	2015-04-13
22B	H00111	CALF PAD, MEDIUM, 155 MM X 180 MM (6 IN X 7 IN)	2015-04-13
22C	H00113	CALF PAD, LARGE, 205 MM X 180 MM (8 IN X 7 IN)	2015-04-13
22D	H00114	CALF PAD, EXTRA LARGE, 155 MM X 180 MM (10 IN X 8 IN)	2015-04-13

ITEM #	PART #	DESCRIPTION	EFFECTIVE
10A	S-0131	POWER ELEVATING CENTER MOUNT ADJUSTABLE RANGE 265 MM TO 405 MM (10.5 IN-16 IN)	2018-12-10
10B	S-0132	POWER ELEVATING CENTER MOUNT ADJUSTABLE RANGE 405 MM TO 510 MM (16 IN-20 IN)	2018-12-10
23,24	S-0135	POWER ELEVATING CENTER MOUNT, FRONT COVER	2018-12-10
25,26A,27,37	S-0133	POWER ELEVATING CENTER MOUNT ACTUATOR 136 KG (300 LB)	2018-12-10
25,26B,27,37	S-0134	POWER ELEVATING CENTER MOUNT ACTUATOR 136-250 KG (301-550LB)	2018-12-10
1-4, 10A, 23-25, 26A, 27-34, 35A	S-0129	STD POWER CENTER MOUNT ASSEMBLY, 265-405 MM (10.5-16")	2018-12-10
1-4, 10B, 23-25, 26A, 27-34, 35A	S-0138	STD POWER CENTER MOUNT ASSEMBLY, 405-510 MM (16-20")	2018-12-10
1-4, 10A, 23-25, 26B, 27-34, 35A	S-0139	HD POWER CENTER MOUNT ASSEMBLY, 265-405 MM (10.5-16")	2019-09-03
1-4, 10B, 23-25, 26B, 27-34, 35A	S-0140	HD POWER CENTER MOUNT ASSEMBLY, 405-510 MM (16-20")	2019-09-03
1-4, 10A, 23-25, 26B, 27-34, 35B	S-0141	VHD POWER CENTER MOUNT ASSEMBLY, 265-405 MM (10.5-16")	2019-09-03
1-4, 10B, 23-25, 26B, 27-34, 35B	S-0142	VHD POWER CENTER MOUNT ASSEMBLY, 405-510 MM (16-20")	2019-09-03
36	1001061	PROTECTIVE END-CAP, SEAT RAIL	2022-03-14
37	1000626	CABLE ASSEMBLY, LA23 ACTUATOR	2018-09-28

POWER ELEVATING AND ARTICULATING CENTER MOUNT FOOT PLATFORM

SEE DESCRIPTION ON FOLLOWING PAGE

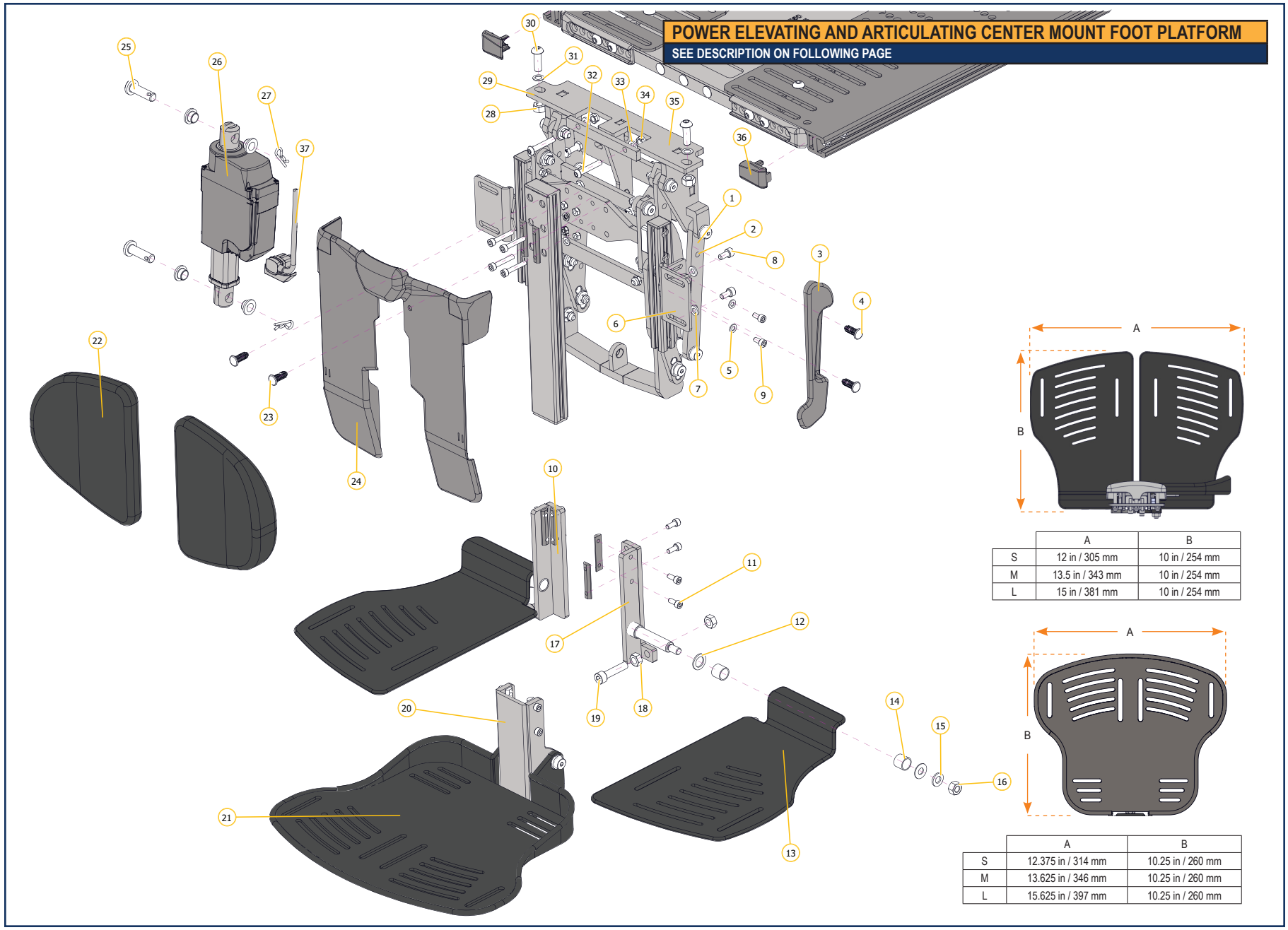

	A	B
S	12 in / 305 mm	10 in / 254 mm
M	13.5 in / 343 mm	10 in / 254 mm
L	15 in / 381 mm	10 in / 254 mm

	A	B
S	12.375 in / 314 mm	10.25 in / 260 mm
M	13.625 in / 346 mm	10.25 in / 260 mm
L	15.625 in / 397 mm	10.25 in / 260 mm

POWER ELEVATING AND ARTICULATING CENTER MOUNT FOOT PLATFORM

ITEM #	PART #	DESCRIPTION	EFFECTIVE
1,2,3A,4	S-0136	POWER ELEVATING CENTER MOUNT, LEFT COVER	2018-12-10
1,2,3B,4	S-0137	POWER ELEVATING CENTER MOUNT, RIGHT COVER	2018-12-10
13A	1004335	FOOTPLATE ASSEMBLY, SMALL, RH	2024-08-20
13B	1004336	FOOTPLATE ASSEMBLY, SMALL, LH	2024-08-20
13C	1004337	FOOTPLATE ASSEMBLY, SMALL, RH	2024-08-20
13D	1004338	FOOTPLATE ASSEMBLY, SMALL, LH	2024-08-20
13E	1004339	FOOTPLATE ASSEMBLY, MEDIUM,RH	2024-08-20
13F	1004340	FOOTPLATE ASSEMBLY, MEDIUM, LH	2024-08-20
20	S-0085	CENTER MOUNT FIXED FOOTPLATE MOUNTING HARDWARE KIT	2017-03-01
21A	S-0147	CENTER MOUNT FIXED FOOTBOARD, SMALL	2017-03-01
21B	S-0148	CENTER MOUNT FIXED FOOTBOARD, MEDIUM	2017-03-01
21C	S-0149	CENTER MOUNT FIXED FOOTBOARD, LARGE	2017-03-01
5-9	S-0130	CALF PADS SUPPORT BRAKETS FOR POWER ELEVATING CENTER MOUNT	2018-12-10
11,12,14,15, 16,17A,18,19	1004517	KIT, HEIGHT & ANGLE ADJ. BKT, CTR MNT FTPLATE, LH	2024-08-20
11,12,14,15, 16,17A,18,19	1004518	KIT, HEIGHT & ANGLE ADJ. BKT, CTR MNT FTPLATE, RH	2024-08-20
22A	H00112	CALF PAD, SMALL, 130 MM X 155 MM (5 IN X 6 IN)	2015-04-13
22B	H00111	CALF PAD, MEDIUM, 155 MM X 180 MM (6 IN X 7 IN)	2015-04-13
22C	H00113	CALF PAD, LARGE, 205 MM X 180 MM (8 IN X 7 IN)	2015-04-13
22D	H00114	CALF PAD, EXTRA LARGE, 155 MM X 180 MM (10 IN X 8 IN)	2015-04-13

ITEM #	PART #	DESCRIPTION	EFFECTIVE
10A	S-0131	POWER ELEVATING CENTER MOUNT ADJUSTABLE RANGE 265 MM TO 405 MM (10.5 IN-16 IN)	2018-12-10
10B	S-0132	POWER ELEVATING CENTER MOUNT ADJUSTABLE RANGE 405 MM TO 510 MM (16 IN-20 IN)	2018-12-10
23,24	S-0135	POWER ELEVATING CENTER MOUNT, FRONT COVER	2018-12-10
25,26A,27,37	S-0133	POWER ELEVATING CENTER MOUNT ACTUATOR 136 KG (300 LB)	2018-12-10
25,26B,27,37	S-0134	POWER ELEVATING CENTER MOUNT ACTUATOR 136-250 KG (301-550LB)	2018-12-10
1-4, 10A, 23-25, 26A, 27-34, 35A	S-0129	STD POWER CENTER MOUNT ASSEMBLY, 265-405 MM (10.5-16")	2018-12-10
1-4, 10B, 23-25, 26A, 27-34, 35A	S-0138	STD POWER CENTER MOUNT ASSEMBLY, 405-510 MM (16-20")	2018-12-10
1-4, 10A, 23-25, 26B, 27-34, 35A	S-0139	HD POWER CENTER MOUNT ASSEMBLY, 265-405 MM (10.5-16")	2019-09-03
1-4, 10B, 23-25, 26B, 27-34, 35A	S-0140	HD POWER CENTER MOUNT ASSEMBLY, 405-510 MM (16-20")	2019-09-03
1-4, 10A, 23-25, 26B, 27-34, 35B	S-0141	VHD POWER CENTER MOUNT ASSEMBLY, 265-405 MM (10.5-16")	2019-09-03
1-4, 10B, 23-25, 26B, 27-34, 35B	S-0142	VHD POWER CENTER MOUNT ASSEMBLY, 405-510 MM (16-20")	2019-09-03
36	1001061	PROTECTIVE END-CAP, SEAT RAIL	2022-03-14
37	1000626	CABLE ASSEMBLY, LA23 ACTUATOR	2018-09-28

POWER ELEVATING AND ARTICULATING CENTER MOUNT FOOT PLATFORM

SEE DESCRIPTION ON FOLLOWING PAGE

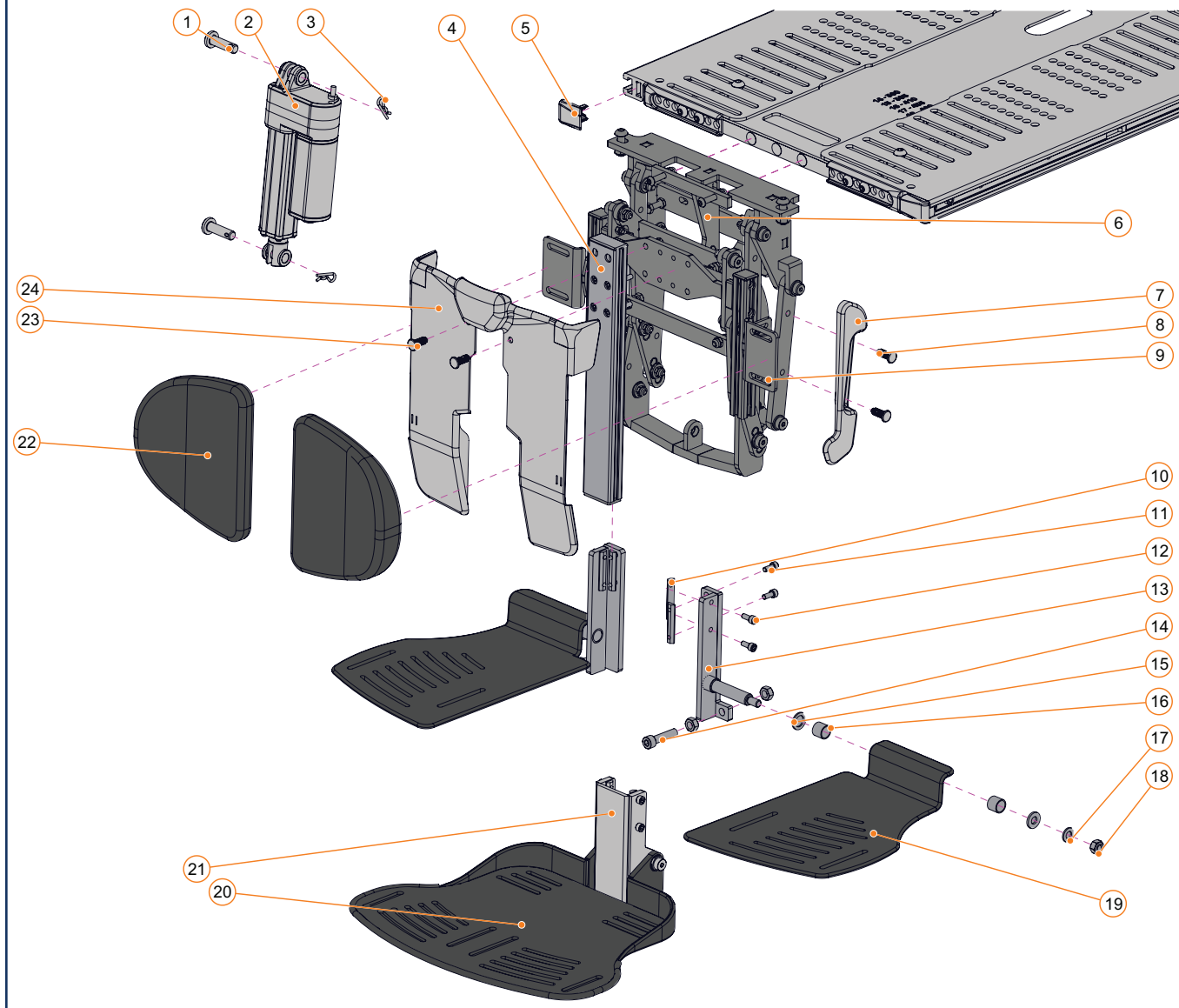

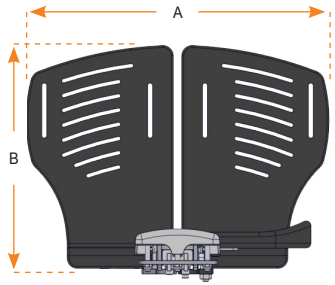

	A	B
S	12 in / 305 mm	10 in / 254 mm
M	13.5 in / 343 mm	10 in / 254 mm
L	15 in / 381 mm	10 in / 254 mm

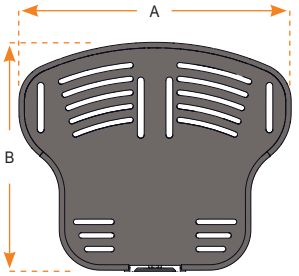

	A	B
S	12.375 in / 314 mm	10.25 in / 260 mm
M	13.625 in / 346 mm	10.25 in / 260 mm
L	15.625 in / 397 mm	10.25 in / 260 mm

POWER ELEVATING AND ARTICULATING CENTER MOUNT FOOT PLATFORM

ITEM #	PART #	DESCRIPTION	EFFECTIVE
1-3	**1005688**	PWR ELEV CTR MT ACT 0-250 KG (0-550LB) [E2378]	2026-03-09
4A	**S-0131**	PWR ELEV CTR MOUNT ADJ RANGE 265-405 MM (10.5-16")	2018-12-10
4B	**S-0132**	PWR ELEV CTR MOUNT ADJ RANGE 405-510 MM (16-20")	2018-12-10
5	**1001061**	PROTECTIVE END-CAP, SEAT RAIL	2022-03-14
1-4A, 6A, 23-24	**S-0129**	STD PWR CTR MT ASSY, 265-405 MM (10.5-16") [E1012]	2018-12-10
1-4B, 6A, 23-24	**S-0138**	STD PWR CTR MT ASSY, 405-510 MM (16-20") [E1012]	2018-12-10
1-4A, 6A, 23-24	**S-0139**	HD PWR CTR MT ASSY, 265-405 MM (10.5-16") [E1012]	2019-09-03
1-4B, 6A, 23-24	**S-0140**	HD PWR CTR MT ASSY, 405-510 MM (16-20") [E1012]	2019-09-03
1-4A, 6B, 23-24	**S-0141**	VHD PWR CTR MT ASSY, 265-405 MM (10.5-16") [E1012]	2019-09-03
1-4B, 6B, 23-24	**S-0142**	VHD PWR CTR MT ASSY, 405-510 MM (16-20") [E1012]	2019-09-03
7A, 8	**S-0136**	PWR ELEV CTR MOUNT, LEFT COVER	2018-12-10
7B, 8	**S-0137**	PWR ELEV CTR MOUNT, RIGHT COVER	2018-12-10
9	**S-0130**	CALF PADS SUPPORT BKTS FOR PWR ELEV CTR MOUNT	2018-12-10
10-12, 13A, 14-18	**1004517**	KIT, HEIGHT & ANGLE ADJ. BKT, CTR MNT FTPLATE, LH	2024-08-20
10-12, 13B, 14-18	**1004518**	KIT, HEIGHT & ANGLE ADJ. BKT, CTR MNT FTPLATE, RH	2024-08-20

ITEM #	PART #	DESCRIPTION	EFFECTIVE
19A	**1004335**	FOOTPLATE ASSEMBLY, SMALL, RH [K0040]	2024-08-20
19B	**1004336**	FOOTPLATE ASSEMBLY, SMALL, LH [K0040]	2024-08-20
19C	**1004337**	FOOTPLATE ASSEMBLY, MEDIUM, RH [K0040]	2024-08-20
19D	**1004338**	FOOTPLATE ASSEMBLY, MEDIUM, LH [K0040]	2024-08-20
19E	**1004339**	FOOTPLATE ASSEMBLY, LARGE, RH [K0040]	2024-08-20
19F	**1004340**	FOOTPLATE ASSEMBLY, LARGE, LH [K0040]	2024-08-20
20A	**S-0147**	SMALL CENTER MOUNT FIXED FOOTBOARD	2017-03-01
20B	**S-0148**	MEDIUM CENTER MOUNT FIXED FOOTBOARD	2017-03-01
20C	**S-0149**	LARGE CENTER MOUNT FIXED FOOTBOARD	2017-03-01
21	**S-0085**	CENTER MOUNT FIXED FOOTPLATE MOUNTING HARDWARE KIT	2017-03-01
22A	**H00112**	CALF PAD, S, 130MM X 155MM (5IN X 6IN) [E0995]	2015-04-13
22B	**H00111**	CALF PAD, M, 155MM X 180MM (6IN X 7IN) [E0995]	2015-04-13
22C	**H00113**	CALF PAD, L, 205MM X 180MM (8IN X 7IN) [E0995]	2015-04-13
22D	**H00114**	CALF PAD, EXTRA-L, 155X180MM (10IN X 8IN) [E0995]	2015-04-13
23-24	**S-0135**	PWR ELEV CTR MOUNT, FRONT COVER	2018-12-10

POWER ELEVATING AND ARTICULATING CENTER MOUNT FOOT PLATFORM, E-BX

SEE DESCRIPTION ON FOLLOWING PAGE

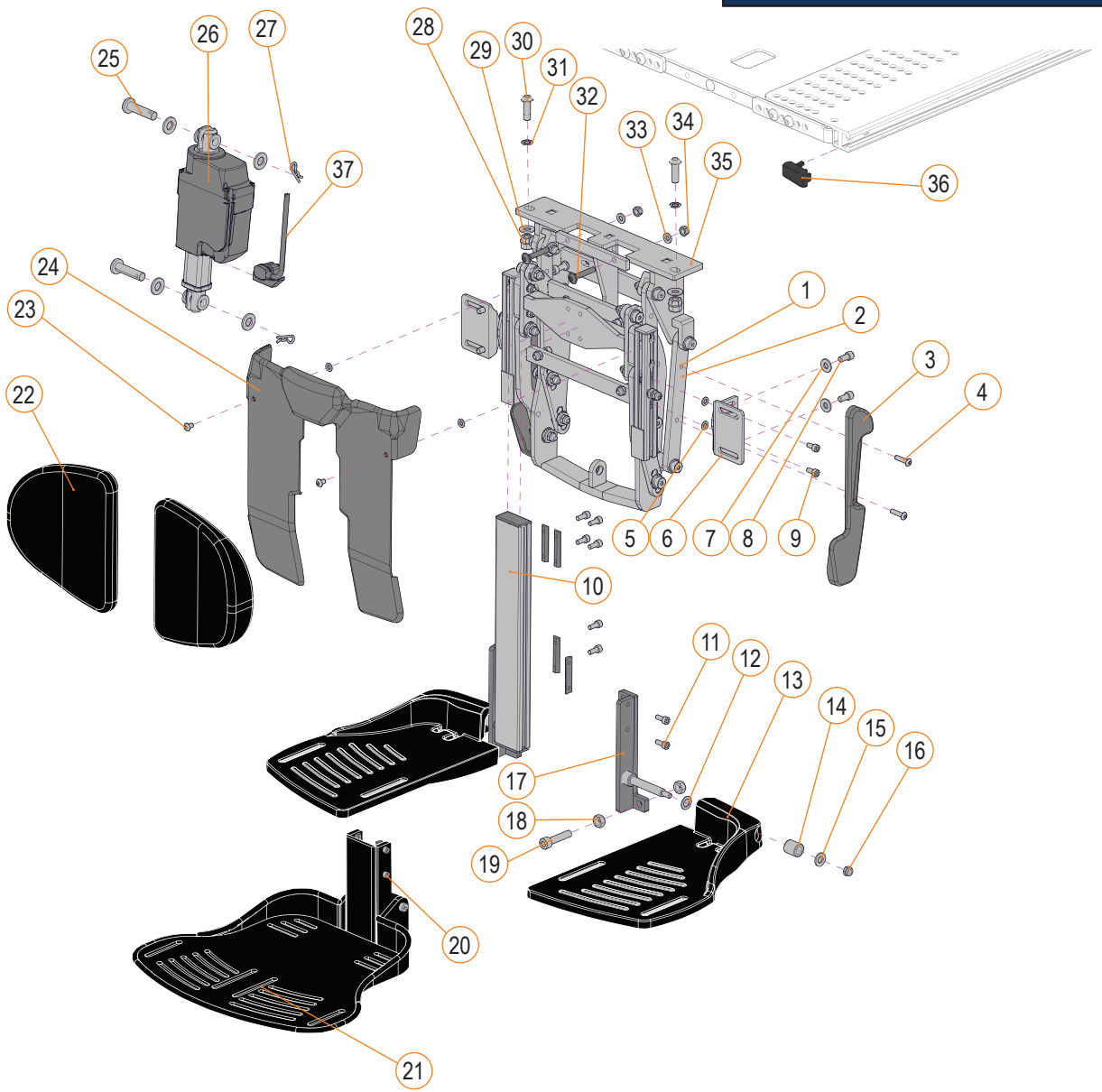

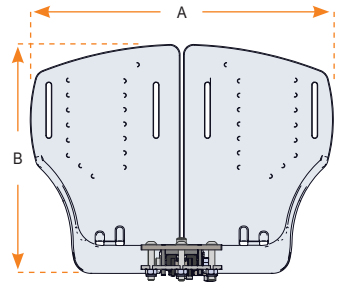

	A	B
S	12 in / 305 mm	10 in / 254 mm
M	13.5 in / 343 mm	10 in / 254 mm
L	15 in / 381 mm	10 in / 254 mm

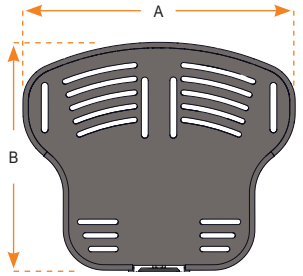

	A	B
S	12.375 in / 314 mm	10.25 in / 260 mm
M	13.625 in / 346 mm	10.25 in / 260 mm
L	15.625 in / 397 mm	10.25 in / 260 mm

POWER ELEVATING AND ARTICULATING CENTER MOUNT FOOT PLATFORM, E-BX

ITEM #	PART #	DESCRIPTION	EFFECTIVE
1,2,3A,4	S-0136	POWER ELEVATING CENTER MOUNT, LEFT COVER	2018-12-10
1,2,3B,4	S-0137	POWER ELEVATING CENTER MOUNT, RIGHT COVER	2018-12-10
13A	A92214	CENTER MOUNT SPLIT FOOTPLATE, SMALL, LEFT HAND	2015-03-05
13B	A92213	CENTER MOUNT SPLIT FOOTPLATE, SMALL, RIGHT HAND	2015-03-05
13C	A92212	CENTER MOUNT SPLIT FOOTPLATE, MEDIUM, LEFT HAND	2015-03-05
13D	A92211	CENTER MOUNT SPLIT FOOTPLATE, MEDIUM, RIGHT HAND	2015-03-05
13E	A92209	CENTER MOUNT SPLIT FOOTPLATE, LARGE, LEFT HAND	2015-03-05
13F	A92208	CENTER MOUNT SPLIT FOOTPLATE, LARGE, RIGHT HAND	2015-03-05
20	S-0085	CENTER MOUNT FIXED FOOTBOARD MOUNTING HARDWARE KIT	2017-03-01
21A	S-0147	CENTER MOUNT FIXED FOOTBOARD, SMALL	2017-03-01
21B	S-0148	CENTER MOUNT FIXED FOOTBOARD, MEDIUM	2017-03-01
21C	S-0149	CENTER MOUNT FIXED FOOTBOARD, LARGE	2017-03-01
5-9	S-0130	CALF PADS SUPPORT BRAKETS FOR POWER ELEVATING CENTER MOUNT	2018-12-10
11,12,14A,15, 16,17A,18,19	S-0080	CENTER MOUNT FOOTPLATE KIT, SMALL, LEFT HAND, ANGLE ADJUSTABLE	2015-03-05
11,12,14A,15, 16,17B,18,19	S-0082	CENTER MOUNT FOOTPLATE KIT, SMALL, RIGHT HAND, ANGLE ADJUSTABLE	2015-03-05
11,12,14B,15, 16,17A,18,19	S-0081	CENTER MOUNT FOOTPLATE KIT, MEDIUM-LARGE, LEFT HAND, ANGLE ADJUSTABLE	2015-03-05
11,12,14B,15, 16,17B,18,19	S-0083	CENTER MOUNT FOOTPLATE KIT, MEDIUM-LARGE, RIGHT HAND, ANGLE ADJUSTABLE	2015-03-05
22A	H00112	CALF PAD, SMALL, 130 MM X 155 MM (5 IN X 6 IN)	2015-04-13
22B	H00111	CALF PAD, MEDIUM, 155 MM X 180 MM (6 IN X 7 IN)	2015-04-13
22C	H00113	CALF PAD, LARGE, 205 MM X 180 MM (8 IN X 7 IN)	2015-04-13
22D	H00114	CALF PAD, EXTRA LARGE, 155 MM X 180 MM (10 IN X 8 IN)	2015-04-13

ITEM #	PART #	DESCRIPTION	EFFECTIVE
10A	S-0131	POWER ELEVATING CENTER MOUNT ADJUSTABLE RANGE 265 MM TO 405 MM (10.5 IN-16 IN)	2018-12-10
10B	S-0132	POWER ELEVATING CENTER MOUNT ADJUSTABLE RANGE 405 MM TO 510 MM (16 IN-20 IN)	2018-12-10
23,24	S-0135	POWER ELEVATING CENTER MOUNT, FRONT COVER	2018-12-10
36	1001061	PROTECTIVE END-CAP, SEAT RAIL	2022-03-14
25,26C,27,37	S-0172	IQ ACTUATOR POWER CENTER MOUNT EBX 136 KG (300 LB)	2020-02-03
25,26D,27,37	S-0173	IQ ACTUATOR HD POWER CENTER MOUNT / STANDER - EBX 250KG (550LB)	2020-02-03
1-4, 10A, 23-25, 26C, 27-34, 35A	S-0166	STD POWER CENTER MOUNT EBX, 265-405 MM (10.5-16”)	2020-02-03
1-4, 10B, 23-25, 26C, 27-34, 35A	S-0167	STD POWER CENTER MOUNT EBX, 405-510 MM (16-20”)	2020-02-03
1-4, 10A, 23-25, 26D, 27-34, 35A	S-0168	HD POWER CENTER MOUNT EBX, 265-405 MM (10.5-16”)	2020-02-03
1-4, 10B, 23-25, 26D, 27-34, 35A	S-0169	HD POWER CENTER MOUNT EBX, 405-510 MM (16-20”)	2020-02-03
1-4, 10A, 23-25, 26D, 27-34, 35B	S-0170	VHD POWER CENTER MOUNT EBX, 265-405 MM (10.5-16”)	2020-02-03
1-4, 10B, 23-25, 26D, 27-34, 35B	S-0171	VHD POWER CENTER MOUNT EBX, 405-510 MM (16-20”)	2020-02-03
1-4, 10B, 23-25, 26D, 27-34, 35B	S-0183	POWER CENTER MOUNT STAND, 405-510 MM (20”)	2019-09-03
1-4, 10A, 23-25, 26D, 27-34, 35B	S-0182	POWER CENTER MOUNT STAND, 265-405MM (10.5-16”)	2019-09-03

POWER ELEVATING AND ARTICULATING CENTER MOUNT FOOT PLATFORM, E-BX

SEE DESCRIPTION ON FOLLOWING PAGE

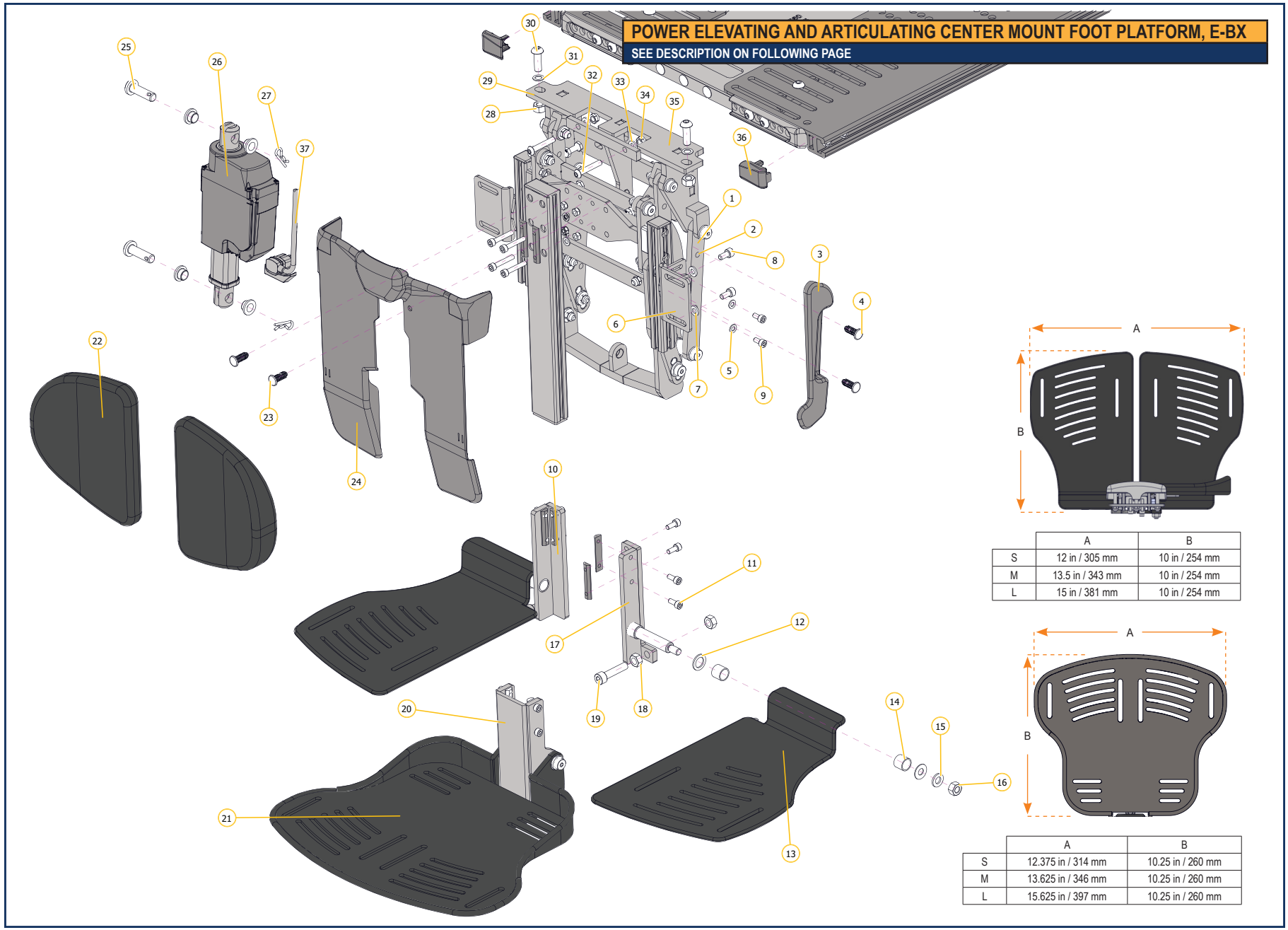

	A	B
S	12 in / 305 mm	10 in / 254 mm
M	13.5 in / 343 mm	10 in / 254 mm
L	15 in / 381 mm	10 in / 254 mm

	A	B
S	12.375 in / 314 mm	10.25 in / 260 mm
M	13.625 in / 346 mm	10.25 in / 260 mm
L	15.625 in / 397 mm	10.25 in / 260 mm

POWER ELEVATING AND ARTICULATING CENTER MOUNT FOOT PLATFORM, E-BX

ITEM #	PART #	DESCRIPTION	EFFECTIVE
1,2,3A,4	S-0136	POWER ELEVATING CENTER MOUNT, LEFT COVER	2018-12-10
1,2,3B,4	S-0137	POWER ELEVATING CENTER MOUNT, RIGHT COVER	2018-12-10
13A	1004335	FOOTPLATE ASSEMBLY, SMALL, RH	2024-08-20
13B	1004336	FOOTPLATE ASSEMBLY, SMALL, LH	2024-08-20
13C	1004337	FOOTPLATE ASSEMBLY, MEDIUM, RH	2024-08-20
13D	1004338	FOOTPLATE ASSEMBLY, MEDIUM, LH	2024-08-20
13E	1004339	FOOTPLATE ASSEMBLY, LARGE, RH	2024-08-20
13F	1004340	FOOTPLATE ASSEMBLY, LARGE, LH	2024-08-20
20	S-0085	CENTER MOUNT FIXED FOOTBOARD MOUNTING HARDWARE KIT	2017-03-01
21A	S-0147	CENTER MOUNT FIXED FOOTBOARD, SMALL	2017-03-01
21B	S-0148	CENTER MOUNT FIXED FOOTBOARD, MEDIUM	2017-03-01
21C	S-0149	CENTER MOUNT FIXED FOOTBOARD, LARGE	2017-03-01
5-9	S-0130	CALF PADS SUPPORT BRAKETS FOR POWER ELEVATING CENTER MOUNT	2018-12-10
11,12,14,15, 16,17A,18,19	1004517	KIT, HEIGHT & ANGLE ADJ. BKT, CTR MNT FTPLATE, LH	2024-08-20
11,12,14,15, 16,17A,18,19	1004518	KIT, HEIGHT & ANGLE ADJ. BKT, CTR MNT FTPLATE, RH	2024-08-20
22A	H00112	CALF PAD, SMALL, 130 MM X 155 MM (5 IN X 6 IN)	2015-04-13
22B	H00111	CALF PAD, MEDIUM, 155 MM X 180 MM (6 IN X 7 IN)	2015-04-13
22C	H00113	CALF PAD, LARGE, 205 MM X 180 MM (8 IN X 7 IN)	2015-04-13
22D	H00114	CALF PAD, EXTRA LARGE, 155 MM X 180 MM (10 IN X 8 IN)	2015-04-13

ITEM #	PART #	DESCRIPTION	EFFECTIVE
10A	S-0131	POWER ELEVATING CENTER MOUNT ADJUSTABLE RANGE 265 MM TO 405 MM (10.5 IN-16 IN)	2018-12-10
10B	S-0132	POWER ELEVATING CENTER MOUNT ADJUSTABLE RANGE 405 MM TO 510 MM (16 IN-20 IN)	2018-12-10
23,24	S-0135	POWER ELEVATING CENTER MOUNT, FRONT COVER	2018-12-10
36	1001061	PROTECTIVE END-CAP, SEAT RAIL	2022-03-14
25,26C,27,37	S-0172	IQ ACTUATOR POWER CENTER MOUNT EBX 136 KG (300 LB)	2020-02-03
25,26D,27,37	S-0173	IQ ACTUATOR HD POWER CENTER MOUNT / STANDER - EBX 250KG (550LB)	2020-02-03
1-4, 10A, 23-25, 26C, 27-34, 35A	S-0166	STD POWER CENTER MOUNT EBX, 265-405 MM (10.5-16")	2020-02-03
1-4, 10B, 23-25, 26C, 27-34, 35A	S-0167	STD POWER CENTER MOUNT EBX, 405-510 MM (16-20")	2020-02-03
1-4, 10A, 23-25, 26D, 27-34, 35A	S-0168	HD POWER CENTER MOUNT EBX, 265-405 MM (10.5-16")	2020-02-03
1-4, 10B, 23-25, 26D, 27-34, 35A	S-0169	HD POWER CENTER MOUNT EBX, 405-510 MM (16-20")	2020-02-03
1-4, 10A, 23-25, 26D, 27-34, 35B	S-0170	VHD POWER CENTER MOUNT EBX, 265-405 MM (10.5-16")	2020-02-03
1-4, 10B, 23-25, 26D, 27-34, 35B	S-0171	VHD POWER CENTER MOUNT EBX, 405-510 MM (16-20")	2020-02-03
1-4, 10B, 23-25, 26D, 27-34, 35B	S-0183	POWER CENTER MOUNT STAND, 405-510 MM (20")	2019-09-03
1-4, 10A, 23-25, 26D, 27-34, 35B	S-0182	POWER CENTER MOUNT STAND, 265-405MM (10.5-16")	2019-09-03

POWER ELEVATING AND ARTICULATING CENTER MOUNT FOOT PLATFORM, E-BX

SEE DESCRIPTION ON FOLLOWING PAGE

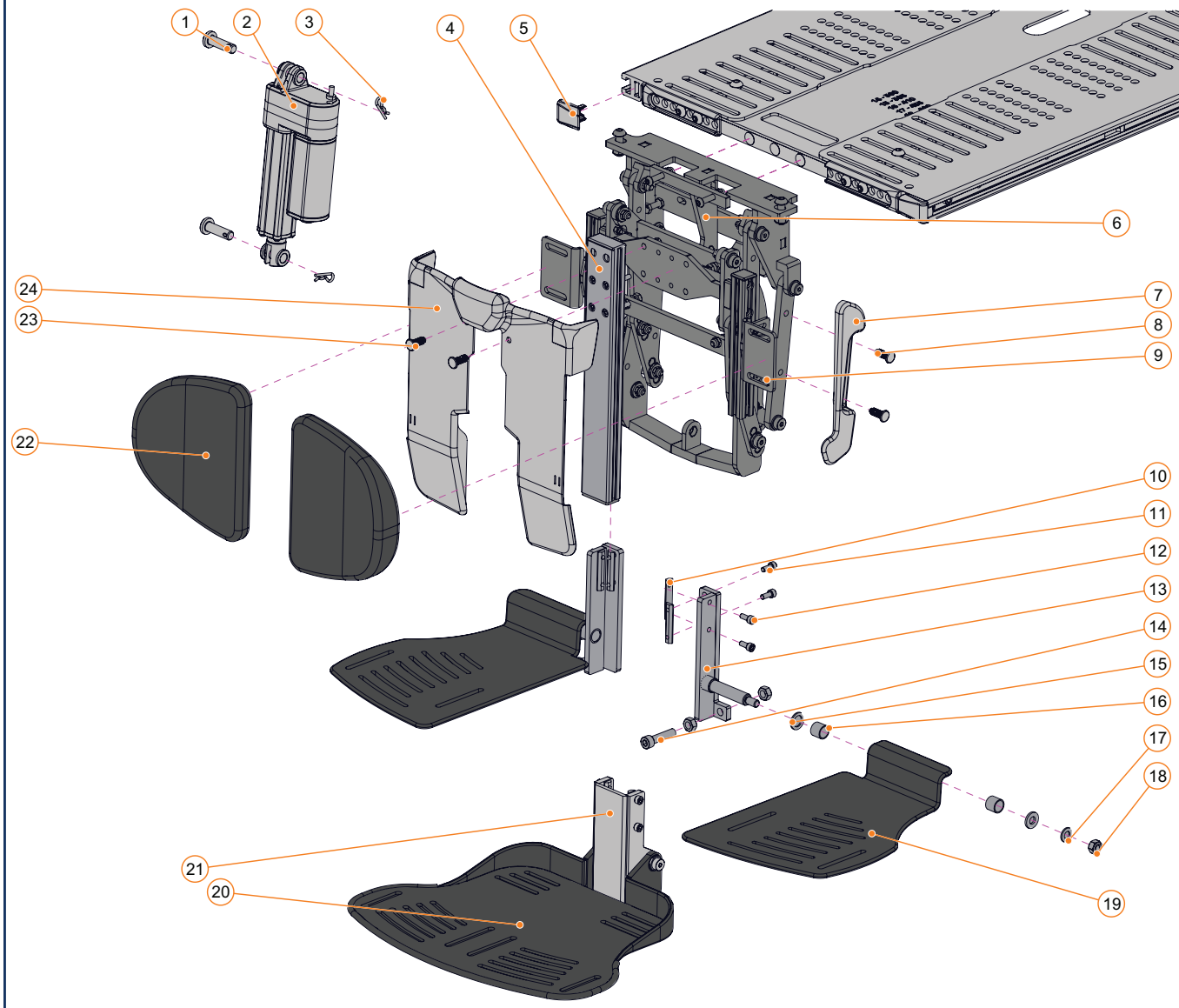

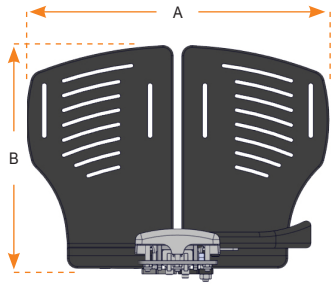

	A	B
S	12 in / 305 mm	10 in / 254 mm
M	13.5 in / 343 mm	10 in / 254 mm
L	15 in / 381 mm	10 in / 254 mm

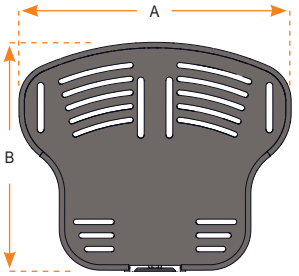

	A	B
S	12.375 in / 314 mm	10.25 in / 260 mm
M	13.625 in / 346 mm	10.25 in / 260 mm
L	15.625 in / 397 mm	10.25 in / 260 mm

POWER ELEVATING AND ARTICULATING CENTER MOUNT FOOT PLATFORM, E-BX

ITEM #	PART #	DESCRIPTION	EFFECTIVE
1-3	**1005689**	IQ ACT HD PWR CTR MT/ST.-EBX 250KG(550LB) [E2378]	2026-03-09
4A	**S-0131**	PWR ELEV CTR MOUNT ADJ RANGE 265-405 MM (10.5-16")	2018-12-10
4B	**S-0132**	PWR ELEV CTR MOUNT ADJ RANGE 405-510 MM (16-20")	2018-12-10
5	**1001061**	PROTECTIVE END-CAP, SEAT RAIL	2022-03-14
1-4A, 6A, 23-24	**S-0166**	STD PWR CTR MT EBX, 265-405 MM (10.5-16") [E1012]	2020-02-03
1-4B, 6A, 23-24	**S-0167**	STD PWR CTR MT EBX, 405-510 MM (16-20") [E1012]	2020-02-03
1-4A, 6A, 23-24	**S-0168**	HD PWR CTR MT EBX, 265-405 MM (10.5-16") [E1012]	2020-02-03
1-4B, 6A, 23-24	**S-0169**	HD PWR CTR MT EBX, 405-510 MM (16-20") [E1012]	2020-02-03
1-4A, 6B, 23-24	**S-0170**	VHD PWR CTR MT EBX, 265-405 MM (10.5-16") [E1012]	2020-02-03
1-4B, 6B, 23-24	**S-0171**	VHD PWR CTR MT EBX, 405-510 MM (16-20") [E1012]	2020-02-03
1-4A, 6B, 23-24	**S-0182**	PWR CTR MT STAND, 265-405MM (10.5-16") [E1012]	2019-09-03
1-4B, 6B, 23-24	**S-0183**	PWR CTR MT STAND, 405-510 MM (20") [E1012]	2019-09-03
7A, 8	**S-0136**	PWR ELEV CTR MOUNT, LEFT COVER	2018-12-10
7B, 8	**S-0137**	PWR ELEV CTR MOUNT, RIGHT COVER	2018-12-10
9	**S-0130**	CALF PADS SUPPORT BKTS FOR PWR ELEV CTR MOUNT	2018-12-10
10-12, 13A, 14-18	**1004517**	KIT, HEIGHT & ANGLE ADJ. BKT, CTR MNT FTPLATE, LH	2024-08-20
10-12, 13B, 14-18	**1004518**	KIT, HEIGHT & ANGLE ADJ. BKT, CTR MNT FTPLATE, RH	2024-08-20

ITEM #	PART #	DESCRIPTION	EFFECTIVE
19A	**1004335**	FOOTPLATE ASSEMBLY, SMALL, RH [K0040]	2024-08-20
19B	**1004336**	FOOTPLATE ASSEMBLY, SMALL, LH [K0040]	2024-08-20
19C	**1004337**	FOOTPLATE ASSEMBLY, MEDIUM, RH [K0040]	2024-08-20
19D	**1004338**	FOOTPLATE ASSEMBLY, MEDIUM, LH [K0040]	2024-08-20
19E	**1004339**	FOOTPLATE ASSEMBLY, LARGE, RH [K0040]	2024-08-20
19F	**1004340**	FOOTPLATE ASSEMBLY, LARGE, LH [K0040]	2024-08-20
20A	**S-0147**	SMALL CENTER MOUNT FIXED FOOTBOARD	2017-03-01
20B	**S-0148**	MEDIUM CENTER MOUNT FIXED FOOTBOARD	2017-03-01
20C	**S-0149**	LARGE CENTER MOUNT FIXED FOOTBOARD	2017-03-01
21	**S-0085**	CENTER MOUNT FIXED FOOTPLATE MOUNTING HARDWARE KIT	2017-03-01
22A	**H00112**	CALF PAD, S, 130MM X 155MM (5IN X 6IN) [E0995]	2015-04-13
22B	**H00111**	CALF PAD, M, 155MM X 180MM (6IN X 7IN) [E0995]	2015-04-13
22C	**H00113**	CALF PAD, L, 205MM X 180MM (8IN X 7IN) [E0995]	2015-04-13
22D	**H00114**	CALF PAD, EXTRA-L, 155X180MM (10IN X 8IN) [E0995]	2015-04-13
23-24	**S-0135**	PWR ELEV CTR MOUNT, FRONT COVER	2018-12-10

OEM LEG REST RECEIVERS			
ITEM #	PART #	DESCRIPTION	PRIOR TO
2	**A9269**	RECEIVER TUBE FOR OEM LEG REST	2021-09-01
1-3, 4A, 5	**C-9283**	QUICKIE LEG REST RECEIVERS	2021-09-01
1-3, 4B, 5	**C-9284**	INVACARE PIVOT STYLE LEG REST RECEIVERS	2021-09-01

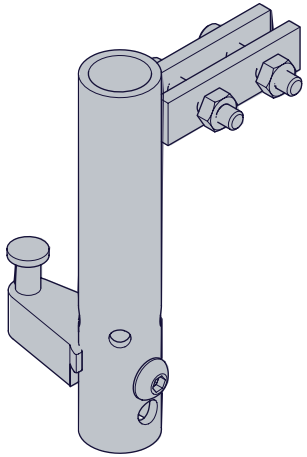

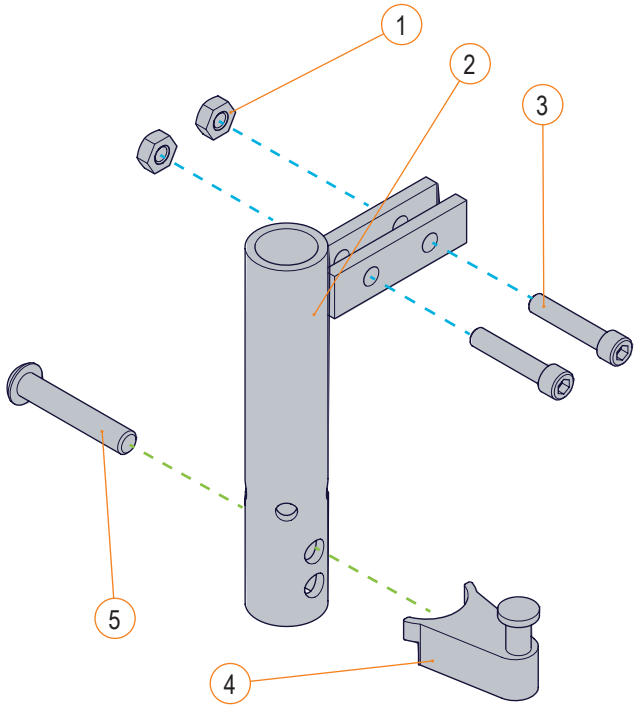

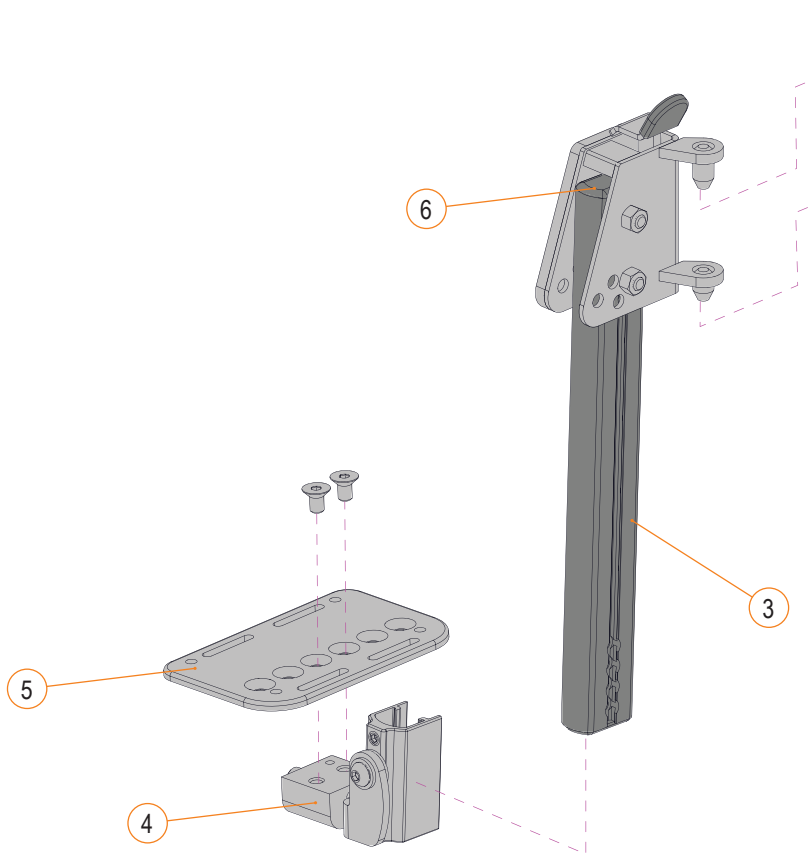

ANGLE ADJUSTMENT (blackened holes)

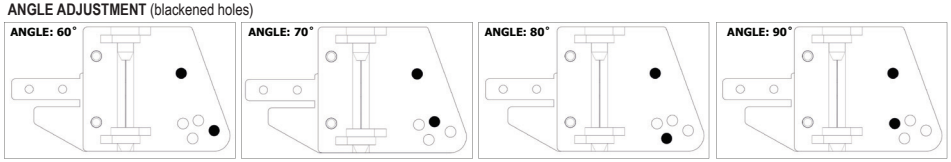

# PART	DESCRIPTION	WIDTH X DEPTH	SEAT WIDTH
1004685	X-SMALL FOOTPLATE	95x105 MM (3.75x6 IN)	280-330 MM (11-13 IN)
1002854	S FOOTPLATE	130x205 MM (5x8 IN)	355-380 MM (14-15 IN)
1003194	M FOOTPLATE	155x205 MM (6x8 IN)	405-430 MM (16-17 IN)
1003195	STD FOOTPLATE	180x205 MM (7x8 IN)	455-485 MM (18-19 IN)
1003196	L FOOTPLATE	205x205 MM (8x8 IN)	510-560 MM (20-22 IN)
1004050	XL FOOTPLATE	243x205 MM (9x8 IN)	585-710 MM (23-28 IN)
1004686	X-SMALL OVERSIZED FOOTPLATE	95x205 MM (3.75x8 IN)	280-330 MM (11-13 IN)
1003646	OVERSIZED FOOTPLATE, XSMALL	90x255 MM (3.5x10 IN)	280-330 MM (11-13 IN)
1001682	OVERSIZED FOOTPLATE, SMALL	130x255 MM (5x10 IN)	355-380 MM (14-15 IN)
1001666	OVERSIZED FOOTPLATE, MEDIUM	155x255 MM (6x10 IN)	405-430 MM (16-17 IN)
1001665	OVERSIZED FOOTPLATE, STANDARD	180x255 MM (7x10 IN)	455-485 MM (18-19 IN)
1001664	OVERSIZED FOOTPLATE, LARGE	205x255 MM (8x10 IN)	510-560 MM (20-22 IN)
1001663	OVERSIZED FOOTPLATE, XLARGE	243x255 MM (9x10 IN)	585-710 MM (23-28 IN)

SIGNATURE STANDARD (PEDIATRIC) SWING-AWAY FOOTRESTS

ITEM #	PART #	DESCRIPTION	EFFECTIVE
1A, 2	**1004425-L**	ASS'Y, AS FOOTREST RECEIVER, STD, LH	2023-12-01
1B, 2	**1004425-R**	ASS'Y, AS FOOTREST RECEIVER, STD, RH	2023-12-01
3A, 6	**1004759-L**	STS PED FOOTREST, 127 TO 254 MM (5 TO 10 IN), LH	2023-12-01
3B, 6	**1004759-R**	STS PED FOOTREST, 127 TO 254 MM (5 TO 10 IN), RH	2023-12-01
3C, 6	**1004760-L**	STS PED FOOTREST, 127 TO 305 MM (5 TO 12 IN), LH	2023-12-01
3D, 6	**1004760-R**	STS PED FOOTREST, 127 TO 305 MM (5 TO 12 IN), RH	2023-12-01
4A	**1004691-L**	STS PED. ANGLE ADJ. FOOTPLATE SUPPORT BKT ASS'Y, LH	2023-12-01
4B	**1004691-R**	STS PED. ANGLE ADJ. FOOTPLATE SUPPORT BKT ASS'Y, RH	2023-12-01
4C	**1004692-L**	STS PED. FIXED FOOTPLATE SUPPORT BRACKET ASS'Y, LH	2023-12-01
4D	**1004692-R**	STS PED. FIXED FOOTPLATE SUPPORT BRACKET ASS'Y, RH	2023-12-01
5A	**1004685**	X-SMALL, PEDIATRIC FOOTPLATE 95X105 MM (3.75X6 IN)	2023-12-01
5B	**1004686**	X-SMALL, O-S PED. FOOTPLATE 95X205 MM (3.75X8 IN)	2023-12-01
5C	**1002854**	S FOOTPLATE 130x205MM (5x8IN)	2023-08-08
5D	**1003194**	M FOOTPLATE 155x205MM (6x8IN)	2023-08-08
5E	**1003646**	OVERSIZED FOOTPLATE, XSMALL, 90x255MM (3.5x10IN)	2021-09-14
5F	**1001682**	OVERSIZED FOOTPLATE, SMALL, 130x255MM (5x10IN)	2021-09-14
5G	**1001666**	OVERSIZED FOOTPLATE, MEDIUM, 155x255MM (6x10IN)	2021-09-14
6	**1004687**	PLASTIC END-CAP, FOOTREST EXTRUSION	2023-12-01
1A, 2, 3A, 6	**1004761-L**	STS PED FOOTREST ASS'Y, 127-254 MM (5-10 IN), LH	2023-12-01
1B, 2, 3B, 6	**1004761-R**	STS PED FOOTREST ASS'Y, 127-254 MM (5-10 IN), RH	2023-12-01
1A, 2, 3C, 6	**1004762-L**	STS PED FOOTREST ASS'Y, 127-305 MM (5-12 IN), LH	2023-12-01
1B, 2, 3D, 6	**1004762-R**	STS PED FOOTREST ASS'Y, 127-305 MM (5-12 IN), RH	2023-12-01

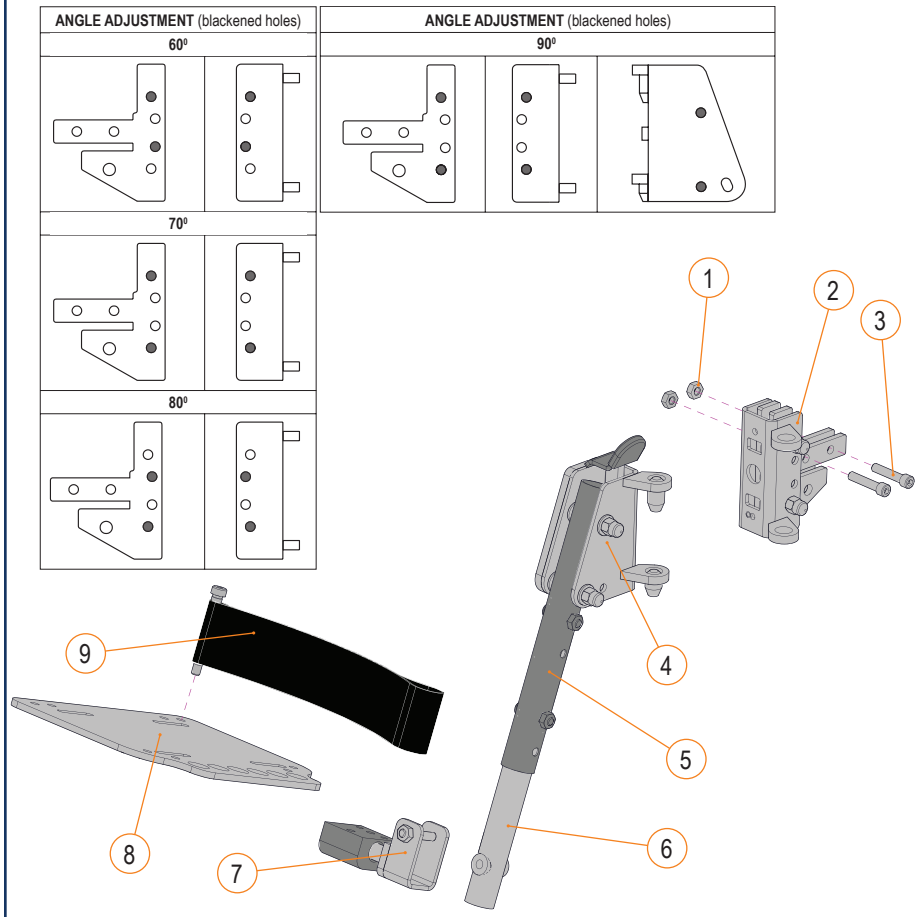

# PART	DESCRIPTION	WIDTH X DEPTH	SEAT WIDTH
A9241	XSMALL FOOTPLATE	90 MM (3.5 IN) W X 205 MM (8 IN) D	280-330 MM (11-13 IN)
1002854	SMALL FOOTPLATE	130 MM (5 IN) W X 205 MM (8 IN) D	355-380 MM (14-15 IN)
1003194	MEDIUM FOOTPLATE	155 MM (6 IN) W X 205 MM (8 IN) D	405-430 MM (16-17 IN)
1003195	STANDARD FOOTPLATE	180 MM (7 IN) W X 205 MM (8 IN) D	455-485 MM (18-19 IN)
1003196	LARGE FOOTPLATE	205 MM (8 IN) W X 205 MM (8 IN) D	510-560 MM (20-22 IN)
1004050	X LARGE FOOTPLATE	243 MM (9.5 IN) W X 205 MM (8 IN) D	585-710 MM (23-28 IN)
1003646	OVERSIZED FOOTPLATE, X-SMALL	90 MM (3.5 IN) W X 255 MM (10 IN) D	280-330 MM (11-13 IN)
1001682	OVERSIZED FOOTPLATE, SMALL	130 MM (5 IN) W X 255 MM (10 IN) D	355-380 MM (14-15 IN)
1001666	OVERSIZED FOOTPLATE, MEDIUM	155 MM (6 IN) W X 255 MM (10 IN) D	405-430 MM (16-17 IN)
1001665	OVERSIZED FOOTPLATE, STANDARD	180 MM (7 IN) W X 255 MM (10 IN) D	455-485 MM (18-19 IN)
1001664	OVERSIZED FOOTPLATE, LARGE	205 MM (8 IN) W X 255 MM (10 IN) D	510-560 MM (20-22 IN)
1001663	OVERSIZED FOOTPLATE, X-LARGE	243 MM (9.5 IN) W X 255 MM (10 IN) D	585-710 MM (23-28 IN)

STANDARD SWING-AWAY FOOTREST

ITEM #	PART #	DESCRIPTION	EFFECTIVE
1-3	C-9249	STD LEG REST RECEIVER	2010-03-08
5A	A9237	STD LEG REST, UPPER TUBE, 143 MM TO 268 MM (5.5 IN-10.5 IN)	2010-03-08
5B	A9272	STD LEG REST, UPPER TUBE, 268 MM TO 395 MM (10.5 IN-15.5 IN)	2010-03-08
5C	A9273	STD LEG REST, UPPER TUBE, 368 MM TO 495 MM (14.5 IN-19.5 IN)	2010-03-08
6A	A9238	STD LEG REST, LOWER TUBE, 143 MM TO 268 MM (5.5 IN-10.5 IN)	2010-03-08
6B	A92120	STD LEGREST, LOWER TUBE, 215 MM TO 265MM (8.5 IN-10.5IN)	2010-03-08
6C	A9240	STD LEG REST, LOWER TUBE, 265 MM TO 495MM (10.5 IN-19.5IN)	2010-03-08
7A	C-92100	PED FIXED FOOTPLATE ADAPTER KIT	2008-05-20
7B	C-9275	PEDIATRIC ANGLE ADJUSTABLE FOOTPLATE ADAPTER KIT, LEFT HAND	2008-05-20
7C	C-9274	PEDIATRIC ANGLE ADJUSTABLE FOOTPLATE ADAPTER KIT, RIGHT HAND	2008-05-20
7D	C-92189	KIT, FIXED ANGLE ADAPTER FOR ADULT STD FOOTPLATE	2012-01-10
7E	C-92190	ADULT ANGLE ADJUSTABLE STD FOOTPLATE ADAPTER KIT	2012-01-10
8A	A9241	XSMALL FOOTPLATE, 90 MM (3.5 IN) W X 205 MM (8 IN) D	2008-04-30
8B	1002854	S FOOTPLATE, 130 MM (5 IN) W X 205 MM (8 IN) D	2022-08-08
8C	1003194	M FOOTPLATE, 155 MM (6 IN) W X 205 MM (8 IN) D	2022-08-08
8D	1003195	STD FOOTPLATE, 180 MM (7 IN) W X 205 MM (8 IN) D	2022-08-08
8E	1003196	L FOOTPLATE, 205 MM (8 IN) W X 205 MM (8 IN) D	2022-08-08
8F	1004050	X L FOOTPLATE, 243 MM (9.5 IN) W X 205 MM (8 IN) D	2022-08-08
8G	1003646	OVERSIZED FOOTPLATE, XSMALL, 90 MM (3.5 IN) W X 255 MM (10 IN) D	2020-07-22
8H	1001682	OVERSIZED FOOTPLATE, SMALL, 130 MM (5 IN) W X 255 MM (10 IN) D	2020-07-22
8I	1001666	OVERSIZED FOOTPLATE, MEDIUM, 155 MM (6 IN) W X 255 MM (10 IN) D	2020-07-22
8J	1001665	OVERSIZED FOOTPLATE, STANDARD, 180 MM (7 IN) W X 255 MM (10 IN) D	2020-07-22
8K	1001664	OVERSIZED FOOTPLATE, LARGE, 205 MM (8 IN) W X 255 MM (10 IN) D	2020-01-03
8L	1001663	OVERSIZED FOOTPLATE, X-LARGE, 243 MM (9.5 IN) W X 255 MM (10 IN) D	2020-07-22
9A	1001397	HEEL LOOP ASSEMBLY - STANDARD	2021-02-01
9B	1001398	HEEL LOOP ASSEMBLY - LARGE SIZE	2021-02-01
4A, 5A, 6A	C-9260	STD LEG REST, 143 MM TO 193 MM (5.5 IN-7.5 IN), LEFT HAND	2010-03-08
4B, 5A, 6A	C-9258	STD LEG REST, 143 MM TO 193 MM (5.5 IN-7.5 IN), RIGHT HAND	2010-03-08
4C, 5A, 6B	C-9261	STD LEG REST, 218 MM TO 268 MM (8.5 IN-10.5 IN), LEFT HAND	2010-03-08
4D, 5A, 6B	C-9259	STD LEG REST, 218 MM TO 268 MM (8.5 IN-10.5 IN), RIGHT HAND	2010-03-08
4E, 5B, 6C	C-92102	STD LEG REST, 268 MM TO 395 MM (10.5 IN-15.5 IN), LEFT HAND	2010-03-08
4F, 5B, 6C	C-92103	STD LEG REST, 268 MM TO 395 MM (10.5 IN-15.5 IN), RIGHT HAND	2010-03-08
4G, 5C, 6C	C-9250	STD LEG REST, 368 MM TO 495 MM (14.5 IN-19.5 IN), LEFT HAND	2010-03-08
4H, 5C, 6C	C-9251	STD LEG REST, 368 MM TO 495 MM (14.5 IN-19.5 IN), RIGHT HAND	2010-03-08
1-3,4A,5A,6A	C-9262	STD LEG REST KIT, 143 MM TO 193 MM (5.5 IN-7.5 IN), LEFT HAND	2010-03-08
1-3,4B,5A,6A	C-9264	STD LEG REST KIT, 143 MM TO 193 MM (5.5 IN-7.5 IN), RIGHT HAND	2010-03-08
1-3,4C,5A,6B	C-9263	STD LEG REST KIT, 218 MM TO 268 MM (8.5 IN-10.5 IN), LEFT HAND	2010-03-08
1-3,4D,5A,6B	C-9265	STD LEG REST KIT, 218 MM TO 268 MM (8.5 IN-10.5 IN),RIGHT HAND	2010-03-08
1-3,4E,5B,6C	C-92104	STD LEG REST KIT, 268 MM TO 395 MM (10.5 IN-15.5 IN), LEFT HAND	2010-03-08
1-3,4F,5B,6C	C-92105	STD LEG REST KIT, 268 MM TO 395 MM (10.5 IN-15.5 IN), RIGHT HAND	2010-03-08
1-3 ,4G,5C,6C	C-9252	STD LEG REST KIT, 368 MM TO 495 MM (14.5 IN-19.5 IN), LEFT HAND	2010-03-08
1-3,4H,5C,6C	C-9253	STD LEG REST KIT, 368 MM TO 495 MM (14.5 IN-19.5 IN), RIGHT HAND	2010-03-08

SIGNATURE STANDARD SWING-AWAY FOOTREST

SEE DESCRIPTION ON FOLLOWING PAGE

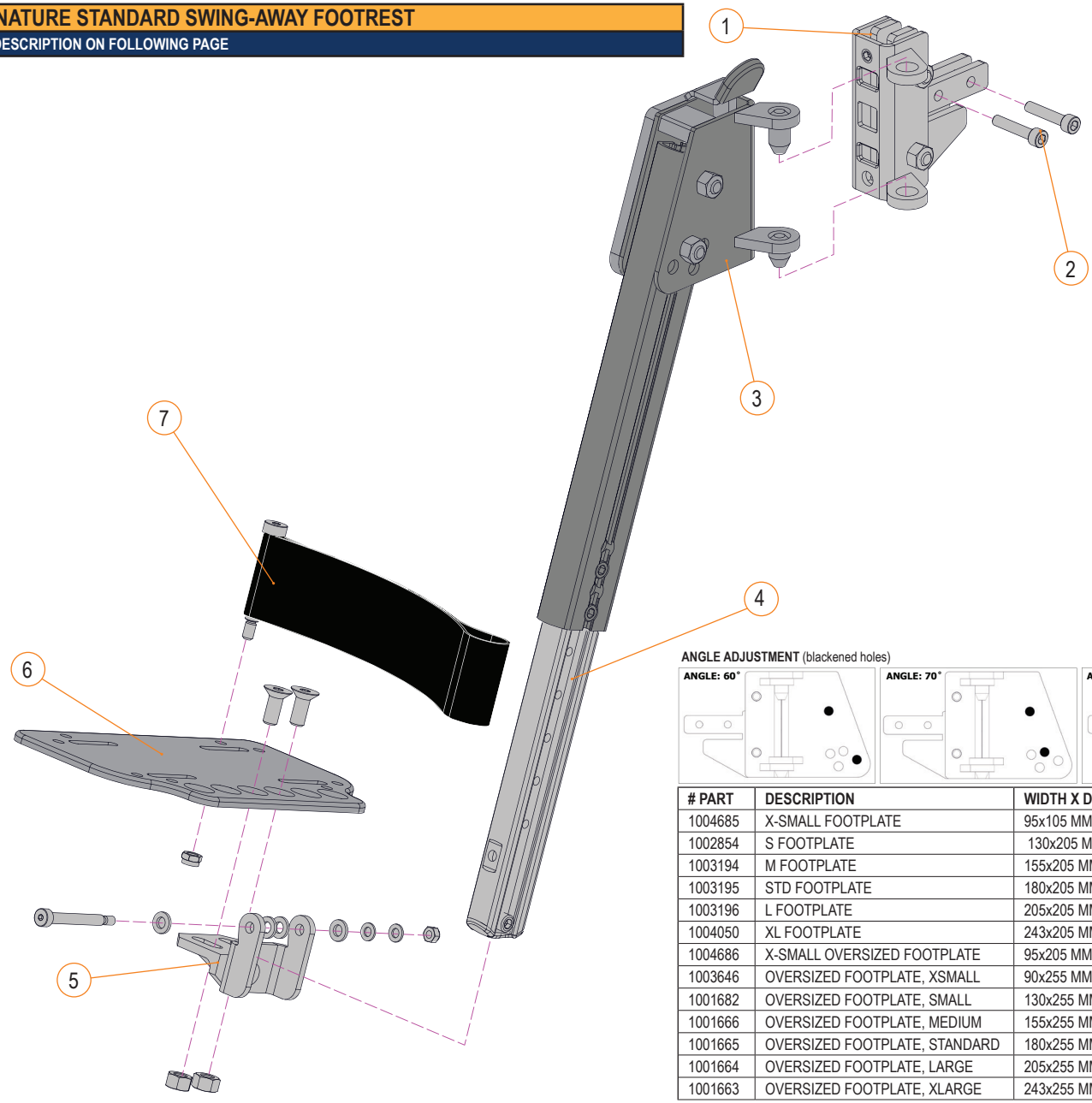

ANGLE ADJUSTMENT (blackened holes)

# PART	DESCRIPTION	WIDTH X DEPTH	SEAT WIDTH
1004685	X-SMALL FOOTPLATE	95x105 MM (3.75x6 IN)	280-330 MM (11-13 IN)
1002854	S FOOTPLATE	130x205 MM (5x8 IN)	355-380 MM (14-15 IN)
1003194	M FOOTPLATE	155x205 MM (6x8 IN)	405-430 MM (16-17 IN)
1003195	STD FOOTPLATE	180x205 MM (7x8 IN)	455-485 MM (18-19 IN)
1003196	L FOOTPLATE	205x205 MM (8x8 IN)	510-560 MM (20-22 IN)
1004050	XL FOOTPLATE	243x205 MM (9x8 IN)	585-710 MM (23-28 IN)
1004686	X-SMALL OVERSIZED FOOTPLATE	95x205 MM (3.75x8 IN)	280-330 MM (11-13 IN)
1003646	OVERSIZED FOOTPLATE, XSMALL	90x255 MM (3.5x10 IN)	280-330 MM (11-13 IN)
1001682	OVERSIZED FOOTPLATE, SMALL	130x255 MM (5x10 IN)	355-380 MM (14-15 IN)
1001666	OVERSIZED FOOTPLATE, MEDIUM	155x255 MM (6x10 IN)	405-430 MM (16-17 IN)
1001665	OVERSIZED FOOTPLATE, STANDARD	180x255 MM (7x10 IN)	455-485 MM (18-19 IN)
1001664	OVERSIZED FOOTPLATE, LARGE	205x255 MM (8x10 IN)	510-560 MM (20-22 IN)
1001663	OVERSIZED FOOTPLATE, XLARGE	243x255 MM (9x10 IN)	585-710 MM (23-28 IN)

SIGNATURE STANDARD SWING-AWAY FOOTREST			
ITEM #	PART #	DESCRIPTION	EFFECTIVE
1A, 2	**1004425-L**	ASS'Y, STS FOOTREST RECEIVER, STD, LH	2023-12-01
1B, 2	**1004425-R**	ASS'Y, STS FOOTREST RECEIVER, STD, RH	2023-12-01
3A	**1004423-L**	STS UPPER EXTRUSION & HANGER, STD FTREST, SHORT LH	2023-12-01
3B	**1004423-R**	STS UPPER EXTRUSION & HANGER, STD FTREST, SHORT RH	2023-12-01
3C	**1004424-L**	STS UPPER EXTRUSION & HANGER, STD FTREST, LONG LH	2023-12-01
3D	**1004424-R**	STS UPPER EXTRUSION & HANGER, STD FTREST, LONG RH	2023-12-01
4	**1004455**	AS LEGREST LOWER EXTRUSION ASS'Y	2023-04-20
5A	**1004430**	AS ANGLE ADJ. FOOTPLATE SUPPORT BRACKET ASS'Y	2023-12-01
5B	**1004431**	AS FIXED FOOTPLATE SUPPORT BRACKET ASS'Y	2023-12-01
6A	**1004685**	X-SMALL, PEDIATRIC FOOTPLATE 95X106 MM (3.75X6 IN)	2023-12-01
6B	**1004686**	X-SMALL, O-S PED. FOOTPLATE 95X205 MM (3.75X8 IN)	2023-12-01
6C	**1002854**	S FOOTPLATE 130x205MM (5x8IN)	2022-08-08
6D	**1003194**	M FOOTPLATE 155x205MM (6x8IN)	2022-08-08
6E	**1003195**	STD FOOTPLATE 180x205MM (7x8IN)	2022-08-08
6F	**1003196**	L FOOTPLATE 205x205MM (8x8IN)	2022-08-08
6G	**1004050**	XL FOOTPLATE 243x205MM (9x8IN)	2022-08-08
6H	**1003646**	OVERSIZED FOOTPLATE, XSMALL, 90x255MM (3.5x10IN)	2021-09-14
6I	**1001682**	OVERSIZED FOOTPLATE, SMALL, 130x255MM (5x10IN)	2021-09-14
6J	**1001666**	OVERSIZED FOOTPLATE, MEDIUM, 155x255MM (6x10IN)	2021-09-14
6K	**1001665**	OVERSIZED FOOTPLATE, STANDARD, 180x255MM (7x10IN)	2021-09-14
6L	**1001664**	OVERSIZED FOOTPLATE, LARGE, 205x255MM (8x10IN)	2021-09-14
6M	**1001663**	OVERSIZED FOOTPLATE, XLARGE, 243x255MM (9x10IN)	2021-09-14
7A	**1001397**	HEEL LOOP ASSEMBLY - STANDARD	2020-07-01
7B	**1001398**	HEEL LOOP ASSEMBLY - LARGE SIZE	2020-07-01
3A, 4	**1004749-L**	STS STD FOOTREST, 318 TO 445MM (12.5 -17.5 IN), LH	2023-12-01
3B, 4	**1004749-R**	STS STD FOOTREST, 318 TO 445 MM (12.5 -17.5 IN), RH	2023-12-01
3C, 4	**1004750-L**	STS STD FOOTREST, 368 TO 495 MM (14.5 -19.5 IN), LH	2023-12-01
3D, 4	**1004750-R**	STS STD FOOTREST, 368 TO 495 MM (14.5 -19.5 IN), RH	2023-12-01
1A, 2, 3A, 4	**1004751-L**	STS STD FOOTREST ASS'Y, 320-445MM (12.5-17.5 IN) LH	2023-12-01
1B, 2, 3B, 4	**1004751-R**	STS STD FOOTREST ASS'Y, 320-445MM (12.5-17.5 IN) RH	2023-12-01
1A, 2, 3C, 4	**1004752-L**	AS STD FOOTREST ASS'Y, 370-495MM (14.5-19.5 IN) LH	2023-12-01
1B, 2, 3D, 4	**1004752-R**	STS STD FOOTREST ASS'Y, 370-495MM (14.5-19.5 IN) RH	2023-12-01

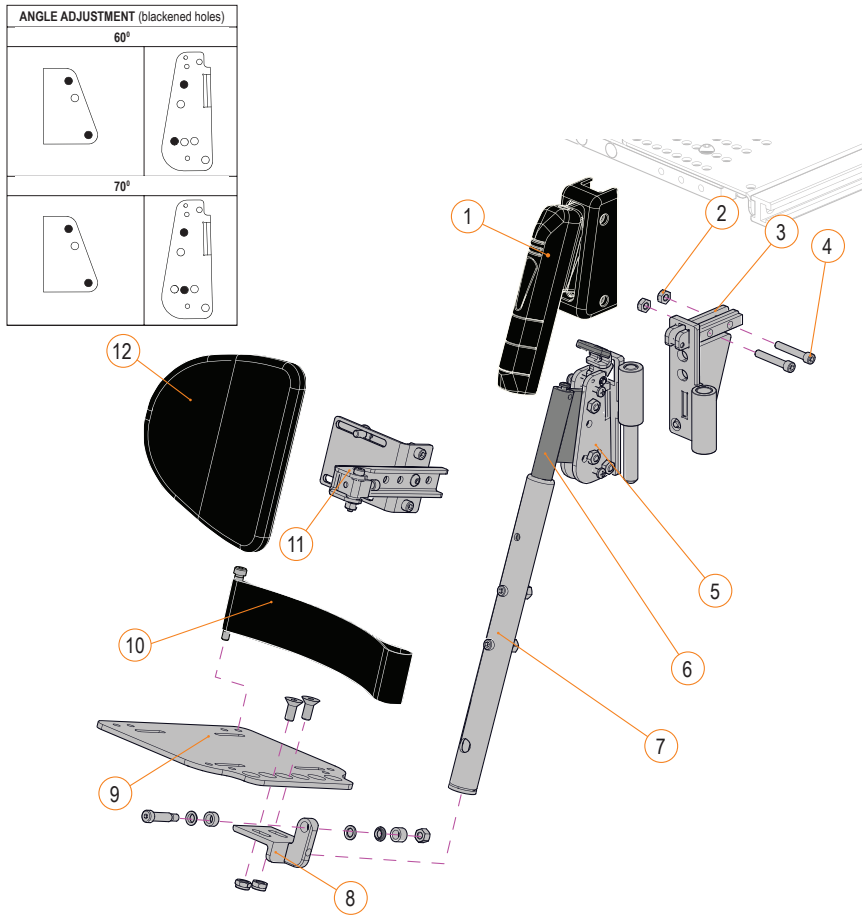

# PART	DESCRIPTION	WIDTH X DEPTH	SEAT WIDTH
A9241	XSMALL FOOTPLATE	90 MM (3.5 IN) W X 205 MM (8 IN) D	280-330 MM (11-13 IN)
1002854	SMALL FOOTPLATE	130 MM (5 IN) W X 205 MM (8 IN) D	355-380 MM (14-15 IN)
1003194	MEDIUM FOOTPLATE	155 MM (6 IN) W X 205 MM (8 IN) D	405-430 MM (16-17 IN)
1003195	STANDARD FOOTPLATE	180 MM (7 IN) W X 205 MM (8 IN) D	455-485 MM (18-19 IN)
1003196	LARGE FOOTPLATE	205 MM (8 IN) W X 205 MM (8 IN) D	510-560 MM (20-22 IN)
1004050	X LARGE FOOTPLATE	243 MM (9.5 IN) W X 205 MM (8 IN) D	585-710 MM (23-28 IN)
1003646	OVERSIZED FOOTPLATE, X-SMALL	90 MM (3.5 IN) W X 255 MM (10 IN) D	280-330 MM (11-13 IN)
1001682	OVERSIZED FOOTPLATE, SMALL	130 MM (5 IN) W X 255 MM (10 IN) D	355-380 MM (14-15 IN)
1001666	OVERSIZED FOOTPLATE, MEDIUM	155 MM (6 IN) W X 255 MM (10 IN) D	405-430 MM (16-17 IN)
1001665	OVERSIZED FOOTPLATE, STANDARD	180 MM (7 IN) W X 255 MM (10 IN) D	455-485 MM (18-19 IN)
1001664	OVERSIZED FOOTPLATE, LARGE	205 MM (8 IN) W X 255 MM (10 IN) D	510-560 MM (20-22 IN)
1001663	OVERSIZED FOOTPLATE, X-LARGE	243 MM (9.5 IN) W X 255 MM (10 IN) D	585-710 MM (23-28 IN)

HEAVY DUTY SWING-AWAY FOOTREST

ITEM #	PART #	DESCRIPTION	EFFECTIVE
1	C-92173	PROTECTION PAD HD FOOT REST	2011-08-19
6A	A92150	HD LEGREST, UPPER TUBE, 318 MM TO 395 MM (12.5 IN-15.5 IN)	2011-08-19
6B	A92130	HD LEGREST, UPPER TUBE, 368 MM TO 495 MM (14.5 IN-19.5 IN)	2011-08-19
7A	A92152	LEFT HAND, HD LEGREST, LOWER TUBE, 318 MM TO 395 MM (12.5 IN-15.5 IN)	2011-08-19
7B	A92151	RIGHT HAND, HD LEGREST, LOWER TUBE, 318 MM TO 395 MM (12.5 IN-15.5 IN)	2011-08-19
7C	A92140	LEFT HAND, HD LEGREST, LOWER TUBE, 368 MM TO 495 MM (14.5 IN-19.5 IN)	2011-08-19
7D	A92135	RIGHT HAND, HD LEGREST, LOWER TUBE, 368 MM TO 495 MM (14.5 IN-19.5 IN)	2011-08-19
8A	C-92172	KIT, FIXED ANGLE ADAPTER FOR ADULT HD FOOTPLATE	2012-01-10
8B	C-92170	ADULT ANGLE ADJUSTABLE HD FOOTPLATE ADAPTER KIT	2012-01-10
9A	A9241	XSMALL FOOTPLATE, 90 MM (3.5 IN) W X 205 MM (8 IN) D	2008-04-30
9B	1002854	S FOOTPLATE, 130 MM (5 IN) W X 205 MM (8 IN) D	2022-08-08
9C	1003194	M FOOTPLATE, 155 MM (6 IN) W X 205 MM (8 IN) D	2022-08-08
9D	1003195	STD FOOTPLATE, 180 MM (7 IN) W X 205 MM (8 IN) D	2022-08-08
9E	1003196	L FOOTPLATE, 205 MM (8 IN) W X 205 MM (8 IN) D	2022-08-08
9F	1004050	X L FOOTPLATE, 243 MM (9.5 IN) W X 205 MM (8 IN) D	2022-08-08
9G	1003646	OVERSIZED FOOTPLATE, XSMALL, 90 MM (3.5 IN) W X 255 MM (10 IN) D	2020-07-22
9H	1001682	OVERSIZED FOOTPLATE, SMALL, 130 MM (5 IN) W X 255 MM (10 IN) D	2020-07-22
9I	1001666	OVERSIZED FOOTPLATE, MEDIUM, 155 MM (6 IN) W X 255 MM (10 IN) D	2020-07-22
9J	1001665	OVERSIZED FOOTPLATE, STANDARD, 180 MM (7 IN) W X 255 MM (10 IN) D	2020-07-22
9K	1001664	OVERSIZED FOOTPLATE, LARGE, 205 MM (8 IN) W X 255 MM (10 IN) D	2020-01-03
9L	1001663	OVERSIZED FOOTPLATE, X-LARGE, 243 MM (9.5 IN) W X 255 MM (10 IN) D	2020-07-22
10A	1001397	HEEL LOOP ASSEMBLY - STANDARD	2021-02-01
10B	1001398	HEEL LOOP ASSEMBLY - LARGE SIZE	2021-02-01
11A	C-92210	STD CALF PAD MOUNTING BRACKET	2014-01-16
11B	C-92209	HD CALF PAD MOUNTING BRACKET	2014-01-16
12A	H00112	CALF PAD, SMALL, 130 MM X 155 MM (5 IN X 6 IN)	2015-04-13
12B	H00111	CALF PAD, MEDIUM, 155 MM X 180 MM (6 IN X 7 IN)	2015-04-13
12C	H00113	CALF PAD, LARGE, 205 MM X 180 MM (8 IN X 7 IN)	2015-04-13
12D	H00114	CALF PAD, EXTRA LARGE, 155 MM X 180 MM (10 IN X 8 IN)	2015-04-13
2,3A,4	C-92178	HD LEGREST RECEIVER, LEFT HAND	2011-08-19
2,3B,4	C-92177	HD LEGREST RECEIVER, RIGHT HAND	2011-08-19
1,5A,6A,7A	C-92182	HD LEGREST, 318 MM TO 395 MM (12.5 IN-15.5 IN), LEFT HAND	2011-08-19
1,5B,6A,7B	C-92181	HD LEGREST, 318 MM TO 395 MM (12.5 IN-15.5 IN), RIGHT HAND	2011-08-19
1,5A,6B,7C	C-92180	HD LEGREST, 368 MM TO 495 MM (14.5 IN-19.5 IN), LEFT HAND	2011-08-19
1,5B,6B,7D	C-92179	HD LEGREST, 368 MM TO 495 MM (14.5 IN-19.5 IN), RIGHT HAND	2011-08-19
1, 2, 3A, 4, 5A, 6A, 7A	C-92184	HD LEGREST KIT, LH, 318-395MM (12.5-15.5IN)	2011-08-19
1, 2, 3B, 4, 5B, 6A, 7B	C-92183	HD LEGREST KIT, 318 MM TO 395 MM (12.5 IN-15.5 IN), RIGHT HAND	2011-08-19
1, 2, 3A, 4, 5A, 6B, 7C	C-92169	HD LEGREST KIT, 368 MM TO 495 MM (14.5 IN-19.5 IN), LEFT HAND	2011-08-19
1, 2, 3B, 4, 5B, 6B, 7D	C-92168	HD LEGREST KIT, 368 MM TO 495 MM (14.5 IN-19.5 IN), RIGHT HAND	2011-08-19
1, 2, 3A, 4, 5A, 6E, 7E	1004000	STUMP SUPPORT, LEFT	2022-01-01
1, 2, 3B, 4, 5B, 6E, 7E	1004001	STUMP SUPPORT, RIGHT	2022-01-01

SIGNATURE HEAVY DUTY SWING-AWAY FOOTREST

SEE DESCRIPTION ON FOLLOWING PAGE

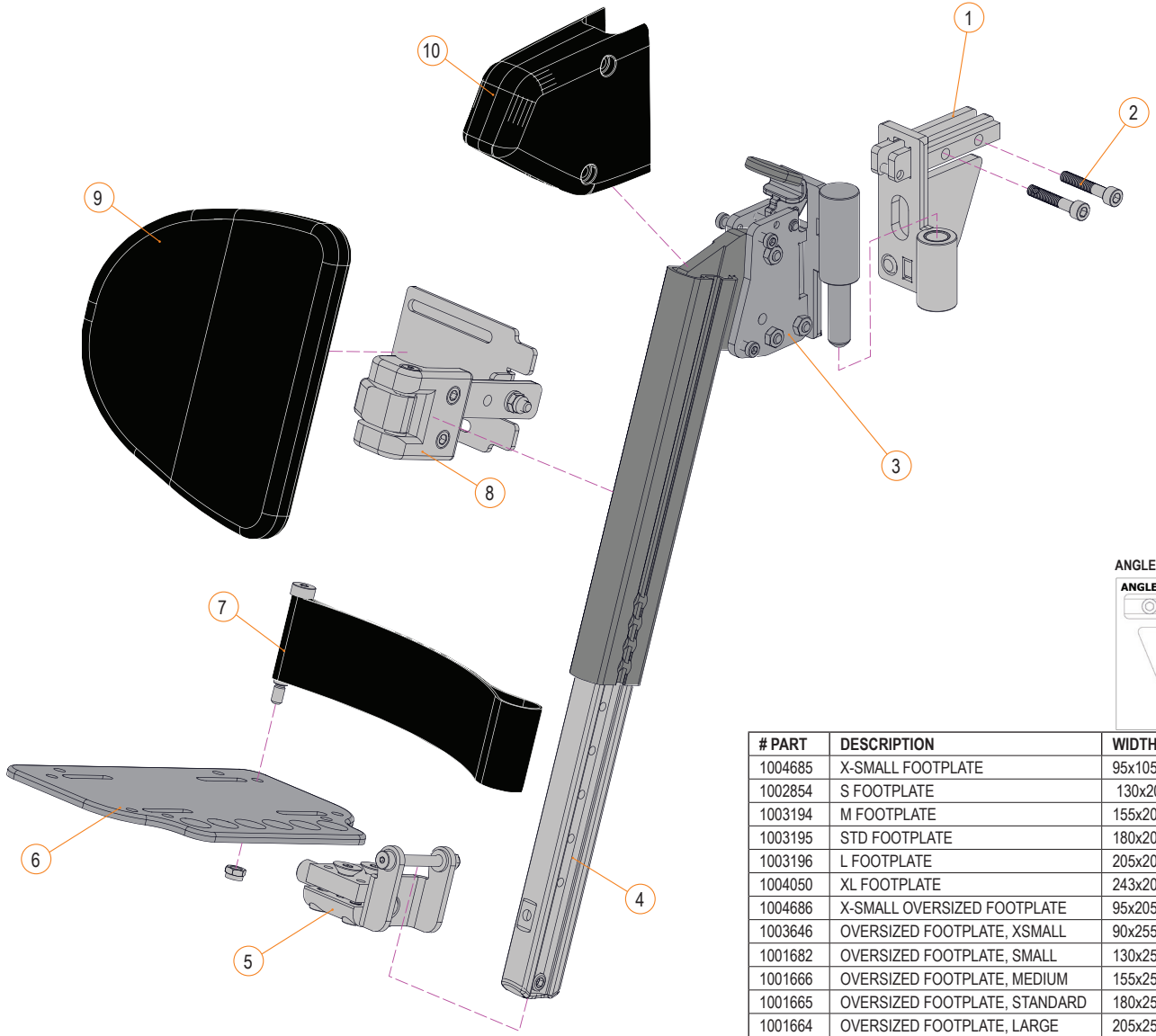

ANGLE ADJUSTMENT (blackened holes)

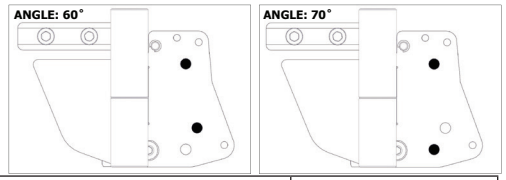

# PART	DESCRIPTION	WIDTH X DEPTH	SEAT WIDTH
1004685	X-SMALL FOOTPLATE	95x105 MM (3.75x6 IN)	280-330 MM (11-13 IN)
1002854	S FOOTPLATE	130x205 MM (5x8 IN)	355-380 MM (14-15 IN)
1003194	M FOOTPLATE	155x205 MM (6x8 IN)	405-430 MM (16-17 IN)
1003195	STD FOOTPLATE	180x205 MM (7x8 IN)	455-485 MM (18-19 IN)
1003196	L FOOTPLATE	205x205 MM (8x8 IN)	510-560 MM (20-22 IN)
1004050	XL FOOTPLATE	243x205 MM (9x8 IN)	585-710 MM (23-28 IN)
1004686	X-SMALL OVERSIZED FOOTPLATE	95x205 MM (3.75x8 IN)	280-330 MM (11-13 IN)
1003646	OVERSIZED FOOTPLATE, XSMALL	90x255 MM (3.5x10 IN)	280-330 MM (11-13 IN)
1001682	OVERSIZED FOOTPLATE, SMALL	130x255 MM (5x10 IN)	355-380 MM (14-15 IN)
1001666	OVERSIZED FOOTPLATE, MEDIUM	155x255 MM (6x10 IN)	405-430 MM (16-17 IN)
1001665	OVERSIZED FOOTPLATE, STANDARD	180x255 MM (7x10 IN)	455-485 MM (18-19 IN)
1001664	OVERSIZED FOOTPLATE, LARGE	205x255 MM (8x10 IN)	510-560 MM (20-22 IN)
1001663	OVERSIZED FOOTPLATE, XLARGE	243x255 MM (9x10 IN)	585-710 MM (23-28 IN)

SIGNATURE HEAVY DUTY SWING-AWAY FOOTREST

ITEM #	PART #	DESCRIPTION	EFFECTIVE
1A, 2	**1004428-L**	ASS'Y, STS FOOTREST RECEIVER, HD, LH	2023-12-01
1B, 2	**1004428-R**	ASS'Y, STS FOOTREST RECEIVER, HD, RH	2023-12-01
3A, 10	**1004426-L**	STS UPPER EXTRUSION & HANGER HD FOOTREST, SHORT LH	2023-12-01
3B, 10	**1004426-R**	STS UPPER EXTRUSION & HANGER HD FOOTREST, SHORT RH	2023-12-01
3C, 10	**1004427-L**	AS UPPER EXTRUSION & HANGER, HD FTREST, LONG LH (370-495MM, 14.5-19.5IN)	2023-12-01
3D, 10	**1004427-R**	AS UPPER EXTRUSION & HANGER, HD FTREST, LONG RH (370-495MM, 14.5-19.5IN)	2023-12-01
4	**1004455**	STS LEGREST LOWER EXTRUSION ASSY	2023-04-20
5A	**1004430**	STS ANGLE ADJ. FOOTPLATE SUPPORT BRACKET ASSY	2023-12-01
5B	**1004431**	STS FIXED FOOTPLATE SUPPORT BRACKET ASSY	2023-12-01
6A	**1004686**	X-SMALL, O-S PED. FOOTPLATE 95X205 MM (3.75X8 IN)	2023-12-01
6B	**1002854**	S FOOTPLATE 130x205MM (5x8IN)	2022-08-08
6C	**1003194**	M FOOTPLATE 155x205MM (6x8IN)	2022-08-08
6D	**1003195**	STD FOOTPLATE 180x205MM (7x8IN)	2022-08-08
6E	**1003196**	L FOOTPLATE 205x205MM (8x8IN)	2022-08-08
6F	**1004050**	XL FOOTPLATE 243x205MM (9x8IN)	2022-08-08
6G	**1003646**	OVERSIZED FOOTPLATE, XSMALL, 90x255MM (3.5x10IN)	2021-09-14
6H	**1001682**	OVERSIZED FOOTPLATE, SMALL, 130x255MM (5x10IN)	2021-09-14
6I	**1001666**	OVERSIZED FOOTPLATE, MEDIUM, 155x255MM (6x10IN)	2021-09-14
6J	**1001665**	OVERSIZED FOOTPLATE, STANDARD, 180x255MM (7x10IN)	2021-09-14
6K	**1001664**	OVERSIZED FOOTPLATE, LARGE, 205x255MM (8x10IN)	2021-09-14
6L	**1001663**	OVERSIZED FOOTPLATE, XLARGE, 243x255MM (9x10IN)	2021-09-14
7A	**1001397**	HEEL LOOP ASSEMBLY - STANDARD	2020-07-01
7B	**1001398**	HEEL LOOP ASSEMBLY - LARGE SIZE	2020-07-01
8A	**1003185-L**	STS , STD CALF PAD MOUNTING BRACKET ASSY, LH	2023-12-01
8B	**1003185-R**	STS , STD CALF PAD MOUNTING BRACKET ASSY, RH	2023-12-01
8C	**1004044-L**	STS , HD CALF PAD MOUNTING BRACKET ASSY, LH	2023-12-01
8D	**1004044-R**	STS , HD CALF PAD MOUNTING BRACKET ASSY, RH	2023-12-01
9A	**H00112**	CALF PAD, SMALL, 130x155MM (5x6IN)	2022-12-12
9B	**H00111**	CALF PAD, MEDIUM, 155x180MM (6x7IN)	2022-12-12
9C	**H00113**	CALF PAD, LARGE, 205x180MM (8x7IN)	2022-12-12
9D	**H00114**	CALF PAD, XLARGE, 255x205MM (10x8IN)	2018-09-21

ITEM #	PART #	DESCRIPTION	EFFECTIVE
10	**1004432**	PROTECTION PAD, AS HD FOOTREST	2023-12-01
3A, 4, 10	**1004747-L**	STS HD FOOTREST, 318 TO 445MM (12.5 - 17.5 IN), LH	2023-12-01
3B, 4, 10	**1004747-R**	STS HD FOOTREST, 318 TO 445MM (12.5 - 17.5 IN), RH	2023-12-01
3C, 4, 10	**1004748-L**	STS HD FOOTREST, 368 TO 495MM (14.5 - 19.5 IN), LH	2023-12-01
3D, 4, 10	**1004748-R**	STS HD FOOTREST, 368 TO 495MM (14.5 - 19.5 IN), RH	2023-12-01
1A, 2, 3A, 4, 10	**1004753-L**	STS HD FOOTREST ASS'Y, 318-445 MM (12.5-17.5 IN) LH	2023-12-01
1B, 2, 3B, 4, 10	**1004753-R**	STS HD FOOTREST ASS'Y, 318-445 MM (12.5-17.5 IN) RH	2023-12-01
1A, 2, 3C, 4, 10	**1004754-L**	STS HD FOOTREST ASS'Y, 368-495 MM (14.5-19.5 IN) LH	2023-12-01
1B, 2, 3D, 4, 10	**1004754-R**	STS HD FOOTREST ASS'Y, 368-495 MM (14.5-19.5 IN) RH	2023-12-01

POWER ELEVATING AND ARTICULATING LEGREST

ITEM #	PART #	DESCRIPTION	EFFECTIVE
6	D00283	LA23 ACTUATOR CABLE	2011-09-26
17A	A92150	HD LEGREST, UPPER TUBE, 318-395 MM (12.5 IN-15.5IN)	2011-08-19
17B	A92130	HD LEGREST, UPPER TUBE, 368-495 MM (14.5 IN-19.5IN)	2011-08-19
18A	A92152	HD LEGREST, LOWER TUBE LH 318-395 MM (12.5 IN-15.5IN)	2011-08-19
18B	A92151	HD LEGREST, LOWER TUBE RH 318-395 MM (12.5 IN-15.5IN)	2011-08-19
18C	A92140	HD LEGREST, LOWER TUBE LH 368-495 MM (14.5 IN-19.5IN)	2011-08-19
18D	A92135	HD LEGREST, LOWER TUBE RH 368-495 MM (14.5 IN-19.5IN)	2011-08-19
19A	C-92172	ADULT FIXED HD FOOTPLATE ADAPTER KIT	2012-01-10
19B	C-92170	ADULT ANGLE ADJUSTABLE HD FOOTPLATE ADAPTER KIT	2012-01-10
20A	A9241	XSMALL FOOTPLATE, 90 MM (3.5 IN) W X 205 MM (8 IN) D	2008-04-30
20B	1002854	S FOOTPLATE, 130 MM (5 IN) W X 205 MM (8 IN) D	2022-08-08
20C	1003194	M FOOTPLATE, 155 MM (6 IN) W X 205 MM (8 IN) D	2022-08-08
20D	1003195	STD FOOTPLATE, 180 MM (7 IN) W X 205 MM (8 IN) D	2022-08-08
20E	1003196	L FOOTPLATE, 205 MM (8 IN) W X 205 MM (8 IN) D	2022-08-08
20F	1004050	X L FOOTPLATE, 243 MM (9.5 IN) W X 205 MM (8 IN) D	2022-08-08
20G	1003646	OVERSIZED FOOTPLATE, XSMALL, 90 MM (3.5 IN) W X 255 MM (10 IN) D	2020-07-22
20H	1001682	OVERSIZED FOOTPLATE, SMALL, 130 MM (5 IN) W X 255 MM (10 IN) D	2020-07-22
20I	1001666	OVERSIZED FOOTPLATE, MEDIUM, 155 MM (6 IN) W X 255 MM (10 IN) D	2020-07-22
20J	1001665	OVERSIZED FOOTPLATE, STANDARD, 180 MM (7 IN) W X 255 MM (10 IN) D	2020-07-22
20K	1001664	OVERSIZED FOOTPLATE, LARGE, 205 MM (8 IN) W X 255 MM (10 IN) D	2020-01-03
20L	1001663	OVERSIZED FOOTPLATE, X-LARGE, 243 MM (9.5 IN) W X 255 MM (10 IN) D	2020-07-22
21A	1001397	HEEL LOOP ASSEMBLY - STANDARD	2021-02-01
21B	1001398	HEEL LOOP ASSEMBLY - LARGE SIZE	2021-02-01
22A	H00112	CALF PAD, SMALL, 130 MM X 155 MM (5 IN X 6 IN)	2015-04-13
22B	H00111	CALF PAD, MEDIUM, 155 MM X 180 MM (6 IN X 7 IN)	2015-04-13
22C	H00113	CALF PAD, LARGE, 205 MM X 180 MM (8 IN X 7 IN)	2015-04-13
22D	H00114	CALF PAD, EXTRA LARGE, 155 MM X 180 MM (10 IN X 8 IN)	2015-04-13
23A	C-92210	STD CALF PAD MOUNTING BRACKET	2014-01-16
23B	C-92209	HD CALF PAD MOUNTING BRACKET	2014-01-16
24	C-92173	PROTECTION PAD HD FOOT REST	2011-08-19
6,7	R00046	ACTUATOR, STROKE 115 MM 1500N	2011-09-26
13,15A,25	C-92175	LH ARTICULATING RECEIVER	2011-06-21
13,15B,25	C-92174	RH ARTICULATING RECEIVER	2011-06-21
1-6,7B,8-14,15A,16A, 17A,18A,24-26	S-0231	POWER LEGREST, 300 LBS, LH, 318 MM TO 395 MM (12.5-15.5IN)	2011-08-31
1-6,7B,8-14,15B, 16B,17A,18B,24-26	S-0232	POWER LEGREST, 300 LBS, RH, 318 MM TO 395 MM (12.5-15.5IN)	2011-08-31
1-6,7B,8-14,15A,16A, 17B,18C,24-26	S-0233	POWER LEGREST, 300 LBS, LH, 368 MM TO 495 MM (14.5-19.5IN)	2011-08-31
1-6,7B,8-14,15B,16B, 17B,18D,24-26	S-0234	POWER LEGREST, 300 LBS, RH, 368 MM TO 495 MM (14.5-19.5IN)	2011-08-31
1-6,7A,8-14,15A,16A, 17A,18A,24-26	S-0226	POWER LEGREST, 550 LBS, LH, 318 MM TO 395 MM (12.5-15.5IN)	2011-08-31
1-6,7A,8-14,15B,16B, 17A, 18B,24-26	S-0228	POWER LEG REST, 550 LBS, RH, 318 MM TO 395 MM (12.5-15.5IN)	2011-08-31
1-6,7A,8-14,15A,16A, 17B,18C,24-26	S-0227	POWER LEGREST, 550 LBS, LH, 368 MM TO 495 MM (14.5-19.5IN)	2011-08-31
1-6,7A,8-14,15B,16B, 17B,18D,24-26	S-0229	POWER LEGREST, 550 LBS, RH, 368 MM TO 495 MM (14.5-19.5IN)	2011-08-31

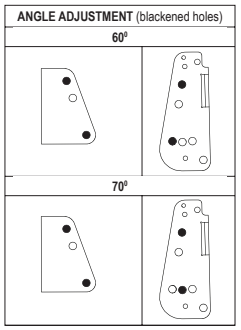

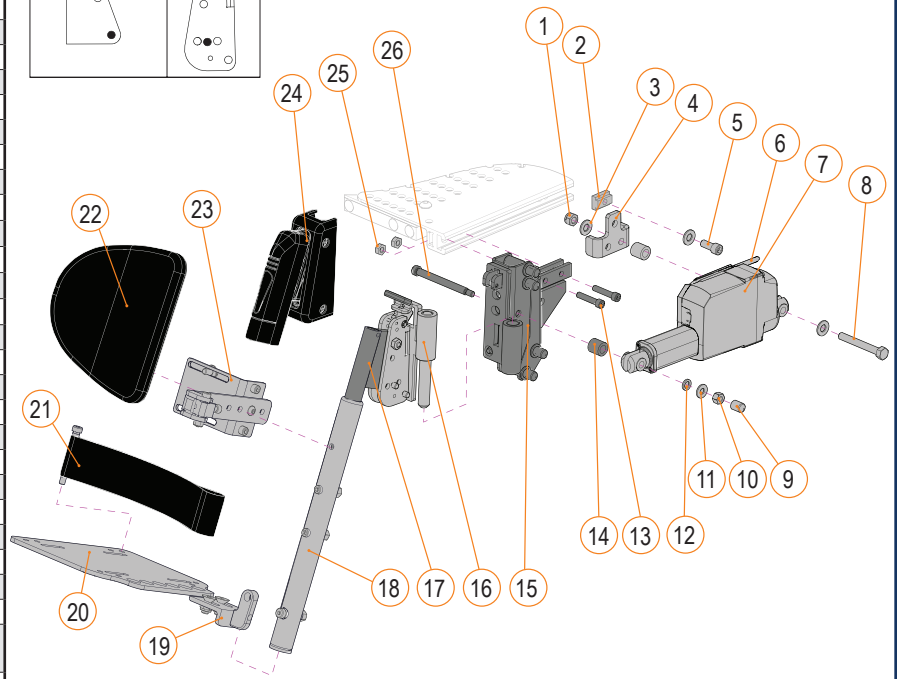

# PART	DESCRIPTION	WIDTH X DEPTH	SEAT WIDTH
A9241	XSMALL FOOTPLATE	90 MM (3.5 IN) W X 205 MM (8 IN) D	280-330 MM (11-13 IN)
1002854	SMALL FOOTPLATE	130 MM (5 IN) W X 205 MM (8 IN) D	355-380 MM (14-15 IN)
1003194	MEDIUM FOOTPLATE	155 MM (6 IN) W X 205 MM (8 IN) D	405-430 MM (16-17 IN)
1003195	STANDARD FOOTPLATE	180 MM (7 IN) W X 205 MM (8 IN) D	455-485 MM (18-19 IN)
1003196	LARGE FOOTPLATE	205 MM (8 IN) W X 205 MM (8 IN) D	510-560 MM (20-22 IN)
1004050	X LARGE FOOTPLATE	243 MM (9.5 IN) W X 205 MM (8 IN) D	585-710 MM (23-28 IN)
1003646	OVERSIZED FOOTPLATE, X-SMALL	90 MM (3.5 IN) W X 255 MM (10 IN) D	280-330 MM (11-13 IN)
1001682	OVERSIZED FOOTPLATE, SMALL	130 MM (5 IN) W X 255 MM (10 IN) D	355-380 MM (14-15 IN)
1001666	OVERSIZED FOOTPLATE, MEDIUM	155 MM (6 IN) W X 255 MM (10 IN) D	405-430 MM (16-17 IN)
1001665	OVERSIZED FOOTPLATE, STANDARD	180 MM (7 IN) W X 255 MM (10 IN) D	455-485 MM (18-19 IN)
1001664	OVERSIZED FOOTPLATE, LARGE	205 MM (8 IN) W X 255 MM (10 IN) D	510-560 MM (20-22 IN)
1001663	OVERSIZED FOOTPLATE, X-LARGE	243 MM (9.5 IN) W X 255 MM (10 IN) D	585-710 MM (23-28 IN)

SIGNATURE POWER ELEVATING & ARTICULATING SWING-AWAY LEGREST

SEE DESCRIPTION ON FOLLOWING PAGE

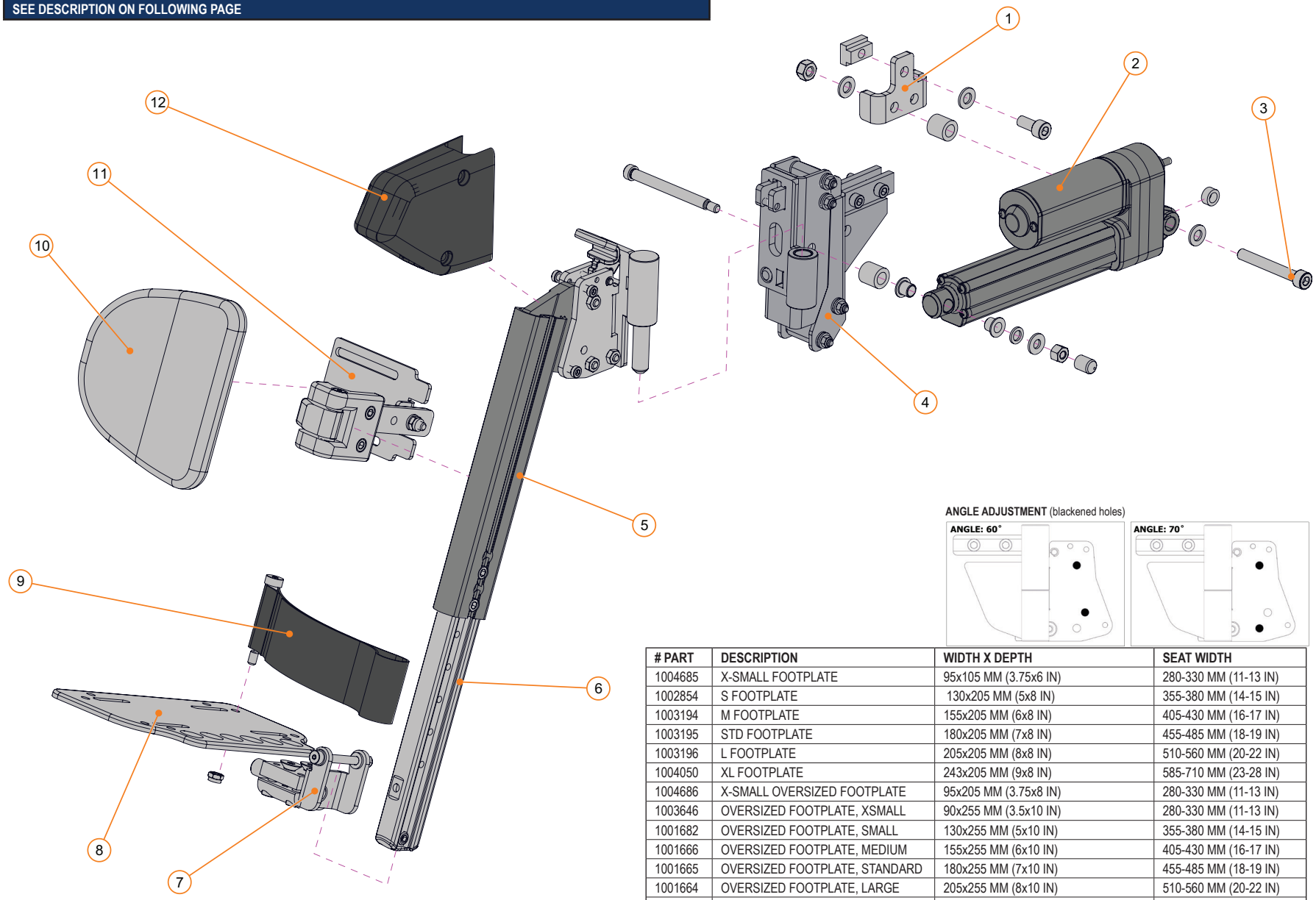

ANGLE ADJUSTMENT (blackened holes)

# PART	DESCRIPTION	WIDTH X DEPTH	SEAT WIDTH
1004685	X-SMALL FOOTPLATE	95x105 MM (3.75x6 IN)	280-330 MM (11-13 IN)
1002854	S FOOTPLATE	130x205 MM (5x8 IN)	355-380 MM (14-15 IN)
1003194	M FOOTPLATE	155x205 MM (6x8 IN)	405-430 MM (16-17 IN)
1003195	STD FOOTPLATE	180x205 MM (7x8 IN)	455-485 MM (18-19 IN)
1003196	L FOOTPLATE	205x205 MM (8x8 IN)	510-560 MM (20-22 IN)
1004050	XL FOOTPLATE	243x205 MM (9x8 IN)	585-710 MM (23-28 IN)
1004686	X-SMALL OVERSIZED FOOTPLATE	95x205 MM (3.75x8 IN)	280-330 MM (11-13 IN)
1003646	OVERSIZED FOOTPLATE, XSMALL	90x255 MM (3.5x10 IN)	280-330 MM (11-13 IN)
1001682	OVERSIZED FOOTPLATE, SMALL	130x255 MM (5x10 IN)	355-380 MM (14-15 IN)
1001666	OVERSIZED FOOTPLATE, MEDIUM	155x255 MM (6x10 IN)	405-430 MM (16-17 IN)
1001665	OVERSIZED FOOTPLATE, STANDARD	180x255 MM (7x10 IN)	455-485 MM (18-19 IN)
1001664	OVERSIZED FOOTPLATE, LARGE	205x255 MM (8x10 IN)	510-560 MM (20-22 IN)
1001663	OVERSIZED FOOTPLATE, XLARGE	243x255 MM (9x10 IN)	585-710 MM (23-28 IN)

SIGNATURE POWER ELEVATING & ARTICULATING SWING-AWAY LEGREST

ITEM #	PART #	DESCRIPTION	EFFECTIVE
3	**R00046**	ACTUATOR, STROKE 115MM 1500N	2019-11-20
4A	**1004429-L**	ASS'Y, AS ARTICULATING LEGREST RECEIVER, LH	2023-12-01
4B	**1004429-R**	ASS'Y, AS ARTICULATING LEGREST RECEIVER, RH	2023-12-01
5A, 12	**1004426-L**	AS UPPER EXTRUSION & HANGER, HD FOOTREST, SHORT LH (320-445MM, 12.5-17.5IN)	2023-12-01
5B, 12	**1004426-R**	AS UPPER EXTRUSION & HANGER, HD FOOTREST, SHORT RH (320-445MM, 12.5-17.5IN)	2023-12-01
5C, 12	**1004427-L**	AS UPPER EXTRUSION & HANGER, HD FTREST, LONG LH (370-495MM, 14.5-19.5IN)	2023-12-01
5D, 12	**1004427-R**	AS UPPER EXTRUSION & HANGER, HD FTREST, LONG RH (370-495MM, 14.5-19.5IN)	2023-12-01
6	**1004455**	AS LEGREST LOWER EXTRUSION ASS'Y	2023-12-01
7A	**1004430**	AS ANGLE ADJ. FOOTPLATE SUPPORT BRACKET ASS'Y	2023-12-01
7B	**1004431**	AS FIXED FOOTPLATE SUPPORT BRACKET ASS'Y	2023-12-01
8A	**1004686**	X-SMALL, O-S PED. FOOTPLATE 95X205 MM (3.75X8 IN)	2023-12-01
8B	**1002854**	S FOOTPLATE 130x205MM (5x8IN)	2022-08-08
8C	**1003194**	M FOOTPLATE 155x205MM (6x8IN)	2022-08-08
8D	**1003195**	STD FOOTPLATE 180x205MM (7x8IN) (K0040)	2022-08-08
8E	**1003196**	L FOOTPLATE 205x205MM (8x8IN)	2022-08-08
8F	**1004050**	XL FOOTPLATE 243x205MM (9x8IN)	2022-08-08
8G	**1003646**	OVERSIZED FOOTPLATE, XSMALL, 90x255MM (3.5x10IN)	2021-09-14
8H	**1001682**	OVERSIZED FOOTPLATE, SMALL, 130x255MM (5x10IN)	2021-09-14
8I	**1001666**	OVERSIZED FOOTPLATE, MEDIUM, 155x255MM (6x10IN)	2021-09-14
8J	**1001665**	OVERSIZED FOOTPLATE, STANDARD, 180x255MM (7x10IN)	2021-09-14
8K	**1001664**	OVERSIZED FOOTPLATE, LARGE, 205x255MM (8x10IN)	2021-09-14
8L	**1001663**	OVERSIZED FOOTPLATE, XLARGE, 243x255MM (9x10IN)	2021-09-14
9A	**1001397**	HEEL LOOP ASSEMBLY - STANDARD	2020-07-01
9B	**1001398**	HEEL LOOP ASSEMBLY - LARGE SIZE	2020-07-01
10A	**1003185-L**	AS, STD CALF PAD MOUNTING BRACKET, LH	2023-12-01
10B	**1003185-R**	AS, STD CALF PAD MOUNTING BRACKET, RH	2023-12-01
10C	**1004044-L**	AS, HD CALF PAD MOUNTING BRACKET, LH	2023-12-01
10D	**1004044-R**	AS, HD CALF PAD MOUNTING BRACKET, RH	2023-12-01
11A	**H00112**	CALF PAD, SMALL, 130x155MM (5x6IN)	2022-12-12
11B	**H00111**	CALF PAD, MEDIUM, 155x180MM (6x7IN)	2022-12-12
11C	**H00113**	CALF PAD, LARGE, 205x180MM (8x7IN)	2022-12-12
11D	**H00114**	CALF PAD, XLARGE, 255x205MM (10x8IN)	2018-09-21
12	**1004432**	PROTECTION PAD, AS HD FOOTREST	2023-12-01

ITEM #	PART #	DESCRIPTION	EFFECTIVE
1, 2, 3A, 4A, 5A, 6, 12	**1004913-L**	STS PWR LEG 300LB, 318-445MM/12.5-17.5", LH	2021-12-16
1, 2, 3A, 4B, 5B, 6, 12	**1004913-R**	STS PWR LEG 300LB, 318-445MM/12.5-17.5", RH	2021-12-16
1, 2, 3A, 4A, 5C, 6, 12	**1004914-L**	STS PWR LEG 300LB, 368-495MM/14.5-19.5", LH	2021-12-16
1, 2, 3A, 4B, 5D, 6, 12	**1004914-R**	STS PWR LEG 300LB, 368-495MM/14.5-19.5", RH	2021-12-16
1, 2, 3B, 4A, 5A, 6, 12	**1004915-L**	STS PWR LEG 550LB, 318-445MM/12.5-17.5", LH	2021-12-16
1, 2, 3B, 4B, 5B, 6, 12	**1004915-R**	STS PWR LEG 550LB, 318-445MM/12.5-17.5", RH	2021-12-16
1, 2, 3B, 4A, 5C, 6, 12	**1004916-L**	STS PWR LEG 550LB, 368-495MM/14.5-19.5", LH	2021-12-16
1, 2, 3B, 4B, 5D, 6, 12	**1004916-R**	STS PWR LEG 550LB, 368-495MM/14.5-19.5", RH	2021-12-16

POWER ELEVATING AND ARTICULATING LEGREST - E-BX

ITEM #	PART #	DESCRIPTION	EFFECTIVE
17A	A92150	HD LEGREST, UPPER TUBE, 268-395 MM (12.5 IN-15.5IN)	2011-08-19
17B	A92130	HD LEGREST, UPPER TUBE, 368-495 MM (14.5 IN-19.5IN)	2011-08-19
18A	A92152	HD LEGREST, LOWER TUBE LH 318-395 MM (12.5 IN-15.5IN)	2011-08-19
18B	A92151	HD LEGREST, LOWER TUBE RH 318-395 MM (12.5 IN-15.5IN)	2011-08-19
18C	A92140	HD LEGREST, LOWER TUBE LH 368-495 MM (14.5 IN-19.5IN)	2011-08-19
18D	A92135	HD LEGREST, LOWER TUBE RH 368-495 MM (14.5 IN-19.5IN)	2011-08-19
19A	C-92172	ADULT FIXED HD FOOTPLATE ADAPTER KIT	2012-01-10
19B	C-92170	ADULT ANGLE ADJUSTABLE HD FOOTPLATE ADAPTER KIT	2012-01-10
20A	A9241	XSMALL FOOTPLATE, 90 MM (3.5 IN) W X 205 MM (8 IN) D	2008-04-30
20B	1002854	S FOOTPLATE, 130 MM (5 IN) W X 205 MM (8 IN) D	2022-08-08
20C	1003194	M FOOTPLATE, 155 MM (6 IN) W X 205 MM (8 IN) D	2022-08-08
20D	1003195	STD FOOTPLATE, 180 MM (7 IN) W X 205 MM (8 IN) D	2022-08-08
20E	1003196	L FOOTPLATE, 205 MM (8 IN) W X 205 MM (8 IN) D	2022-08-08
20F	1004050	X L FOOTPLATE, 243 MM (9.5 IN) W X 205 MM (8 IN) D	2022-08-08
20G	1003646	OVERSIZED FOOTPLATE, XSMALL, 90 MM (3.5 IN) W X 255 MM (10 IN) D	2020-07-22
20H	1001682	OVERSIZED FOOTPLATE, SMALL, 130 MM (5 IN) W X 255 MM (10 IN) D	2020-07-22
20I	1001666	OVERSIZED FOOTPLATE, MEDIUM, 155 MM (6 IN) W X 255 MM (10 IN) D	2020-07-22
20J	1001665	OVERSIZED FOOTPLATE, STANDARD, 180 MM (7 IN) W X 255 MM (10 IN) D	2020-07-22
20K	1001664	OVERSIZED FOOTPLATE, LARGE, 205 MM (8 IN) W X 255 MM (10 IN) D	2020-01-03
20L	1001663	OVERSIZED FOOTPLATE, X-LARGE, 243 MM (9.5 IN) W X 255 MM (10 IN) D	2020-07-22
21A	1001397	HEEL LOOP ASSEMBLY - STANDARD	2021-02-01
21B	1001398	HEEL LOOP ASSEMBLY - LARGE SIZE	2021-02-01
22A	H00112	CALF PAD, SMALL, 130 MM X 155 MM (5 IN X 6 IN)	2015-04-13
22B	H00111	CALF PAD, MEDIUM, 155 MM X 180 MM (6 IN X 7 IN)	2015-04-13
22C	H00113	CALF PAD, LARGE, 205 MM X 180 MM (8 IN X 7 IN)	2015-04-13
22D	H00114	CALF PAD, EXTRA LARGE, 155 MM X 180 MM (10 IN X 8 IN)	2015-04-13
23A	C-92210	STD CALF PAD MOUNTING BRACKET	2014-01-16
23B	C-92209	HD CALF PAD MOUNTING BRACKET	2014-01-16
24	C-92173	PROTECTION PAD HD FOOT REST	2011-08-19
13,15A,25	C-92175	LH ARTICULATING RECEIVER	2011-06-21
13,15B,25	C-92174	RH ARTICULATING RECEIVER	2011-06-21
1, 3, 6, 7A, 8-12,14,26	S-0214	IQ ACTUATOR LH LEG, 115MM STROKE 1200N EBX - STD	2020-02-03
1, 3, 6, 7A, 8-12,14,26	S-0215	IQ ACTUATOR RH LEG, 115MM STROKE 1200N EBX - STD	2020-02-03
1, 3, 6, 7B, 8-12,14,26	S-0216	IQ ACTUATOR LH LEG, 115MM STROKE 1500N EBX - VHD	2020-02-03
1, 3, 6, 7B, 8-12,14,26	S-0217	IQ ACTUATOR RH LEG, 115MM STROKE 1500N EBX - VHD	2020-02-03
1-6,7A,8-14,15A, 16A,17A,18A,24-26	S-0208	POWER LEGREST, 300 LBS, LH, 318 MM TO 395 MM (12.5-15.5IN), E-BX	2020-02-03
1-6,7A,8-14,15B, 16B,17A,18B,24-26	S-0212	POWER LEGREST, 300 LBS, RH, 318 MM TO 395 MM (12.5-15.5IN), E-BX	2020-02-03
1-6,7A,8-14,15A, 16A,17B,18C,24-26	S-0209	POWER LEGREST, 300 LBS, LH, 368 MM TO 495 MM (14.5-19.5IN), E-BX	2020-02-03
1-6,7A,8-14,15B, 16B,17B,18D,24-26	S-0213	POWER LEGREST, 300 LBS, RH, 368 MM TO 495 MM (14.5-19.5IN), E-BX	2020-02-03
1-6,7B,8-14,15A, 16A,17A,18A,24-26	S-0206	POWER LEGREST, 550 LBS, LH, 318 MM TO 395 MM (12.5-15.5IN), E-BX	2020-02-03
1-6,7B,8-14,15B, 16B,17A,18B,24-26	S-0210	POWER LEGREST, 550 LBS, RH, 318 MM TO 395 MM (12.5-15.5IN), E-BX	2020-02-03
1-6,7B,8-14,15A, 16A,17B,18C,24-26	S-0207	POWER LEGREST, 550 LBS, LH, 368 MM TO 495 MM (14.5-19.5IN), E-BX	2020-02-03
1-6,7B,8-14,15B, 16B,17B,18D,24-26	S-0211	POWER LEGREST, 550 LBS, RH, 368 MM TO 495 MM (14.5-19.5IN), E-BX	2020-02-03

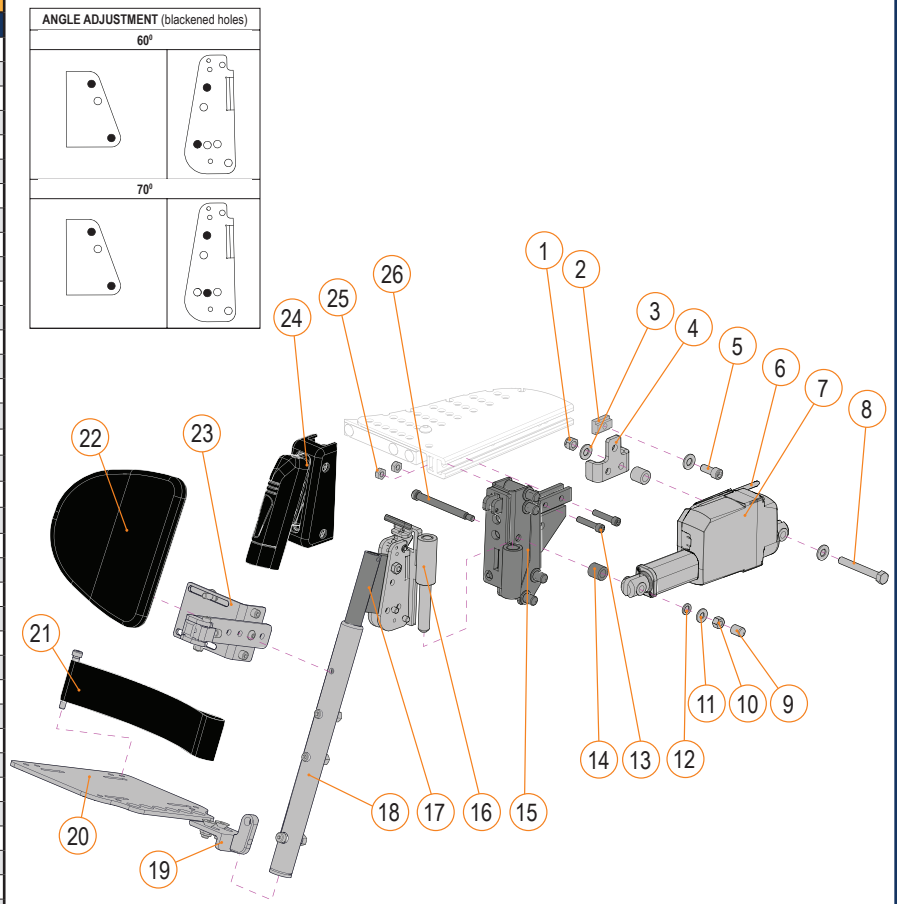

# PART	DESCRIPTION	WIDTH X DEPTH	SEAT WIDTH
A9241	XSMALL FOOTPLATE	90 MM (3.5 IN) W X 205 MM (8 IN) D	280-330 MM (11-13 IN)
1002854	SMALL FOOTPLATE	130 MM (5 IN) W X 205 MM (8 IN) D	355-380 MM (14-15 IN)
1003194	MEDIUM FOOTPLATE	155 MM (6 IN) W X 205 MM (8 IN) D	405-430 MM (16-17 IN)
1003195	STANDARD FOOTPLATE	180 MM (7 IN) W X 205 MM (8 IN) D	455-485 MM (18-19 IN)
1003196	LARGE FOOTPLATE	205 MM (8 IN) W X 205 MM (8 IN) D	510-560 MM (20-22 IN)
1004050	X LARGE FOOTPLATE	243 MM (9.5 IN) W X 205 MM (8 IN) D	585-710 MM (23-28 IN)
1003646	OVERSIZED FOOTPLATE, X-SMALL	90 MM (3.5 IN) W X 255 MM (10 IN) D	280-330 MM (11-13 IN)
1001682	OVERSIZED FOOTPLATE, SMALL	130 MM (5 IN) W X 255 MM (10 IN) D	355-380 MM (14-15 IN)
1001666	OVERSIZED FOOTPLATE, MEDIUM	155 MM (6 IN) W X 255 MM (10 IN) D	405-430 MM (16-17 IN)
1001665	OVERSIZED FOOTPLATE, STANDARD	180 MM (7 IN) W X 255 MM (10 IN) D	455-485 MM (18-19 IN)
1001664	OVERSIZED FOOTPLATE, LARGE	205 MM (8 IN) W X 255 MM (10 IN) D	510-560 MM (20-22 IN)
1001663	OVERSIZED FOOTPLATE, X-LARGE	243 MM (9.5 IN) W X 255 MM (10 IN) D	585-710 MM (23-28 IN)

SIGNATURE POWER ELEVATING & ARTICULATING SWING-AWAY LEGREST - E-BX

SEE DESCRIPTION ON FOLLOWING PAGE

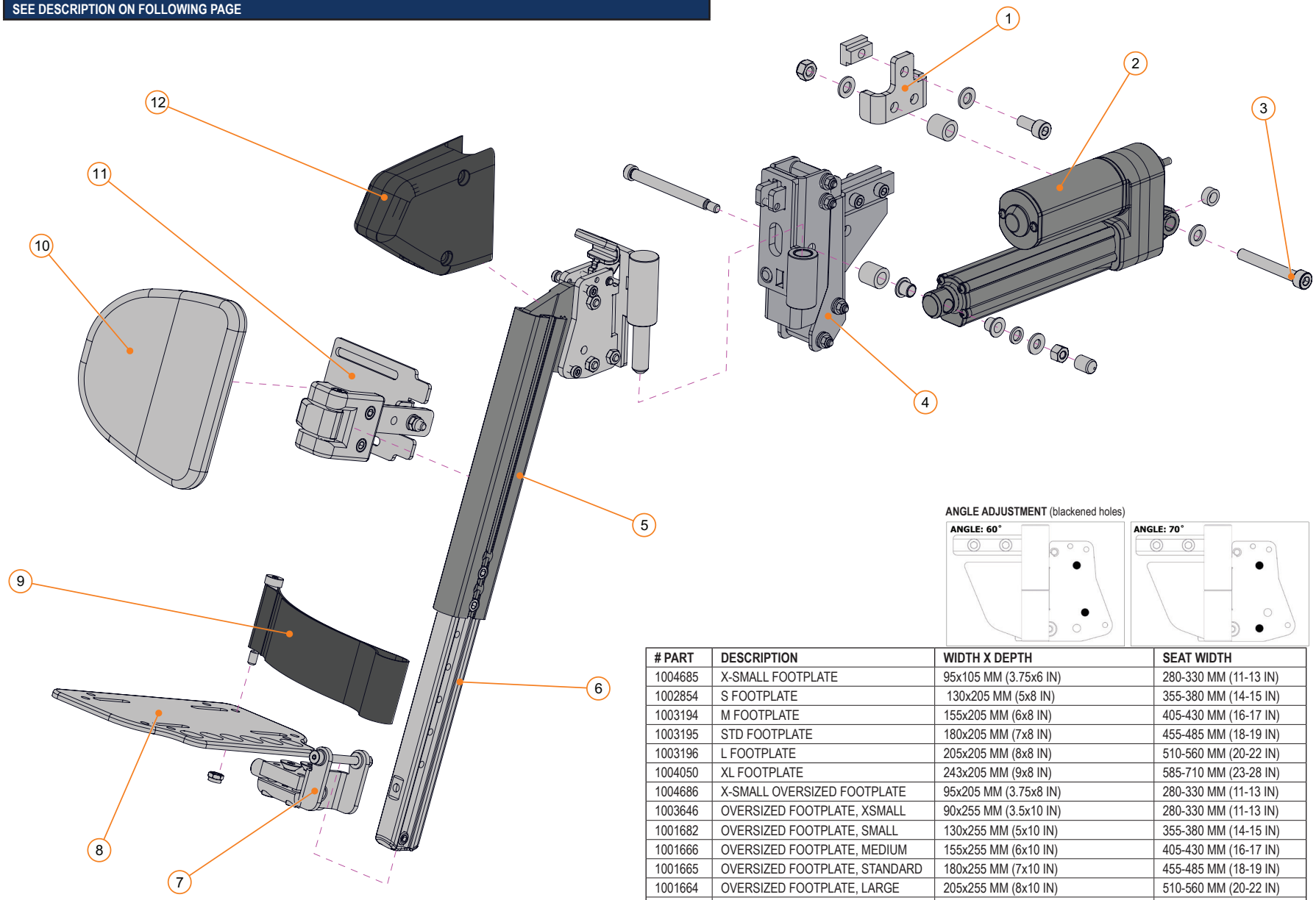

ANGLE ADJUSTMENT (blackened holes)

# PART	DESCRIPTION	WIDTH X DEPTH	SEAT WIDTH
1004685	X-SMALL FOOTPLATE	95x105 MM (3.75x6 IN)	280-330 MM (11-13 IN)
1002854	S FOOTPLATE	130x205 MM (5x8 IN)	355-380 MM (14-15 IN)
1003194	M FOOTPLATE	155x205 MM (6x8 IN)	405-430 MM (16-17 IN)
1003195	STD FOOTPLATE	180x205 MM (7x8 IN)	455-485 MM (18-19 IN)
1003196	L FOOTPLATE	205x205 MM (8x8 IN)	510-560 MM (20-22 IN)
1004050	XL FOOTPLATE	243x205 MM (9x8 IN)	585-710 MM (23-28 IN)
1004686	X-SMALL OVERSIZED FOOTPLATE	95x205 MM (3.75x8 IN)	280-330 MM (11-13 IN)
1003646	OVERSIZED FOOTPLATE, XSMALL	90x255 MM (3.5x10 IN)	280-330 MM (11-13 IN)
1001682	OVERSIZED FOOTPLATE, SMALL	130x255 MM (5x10 IN)	355-380 MM (14-15 IN)
1001666	OVERSIZED FOOTPLATE, MEDIUM	155x255 MM (6x10 IN)	405-430 MM (16-17 IN)
1001665	OVERSIZED FOOTPLATE, STANDARD	180x255 MM (7x10 IN)	455-485 MM (18-19 IN)
1001664	OVERSIZED FOOTPLATE, LARGE	205x255 MM (8x10 IN)	510-560 MM (20-22 IN)
1001663	OVERSIZED FOOTPLATE, XLARGE	243x255 MM (9x10 IN)	585-710 MM (23-28 IN)

SIGNATURE POWER ELEVATING & ARTICULATING SWING-AWAY LEGREST - E-BX

ITEM #	PART #	DESCRIPTION	EFFECTIVE
1,2,3A	**1004776-L**	IQ ACTUATOR, LH LEG, 115MM STROKE, 1500N, EBX	2023-12-01
1,2,3B	**1004776-R**	IQ ACTUATOR, RH LEG, 115MM STROKE, 1500N, EBX	2023-12-01
4A	**1004429-L**	ASS'Y, STS ARTICULATING LEGREST RECEIVER, LH	2023-12-01
4B	**1004429-R**	ASS'Y, STS ARTICULATING LEGREST RECEIVER, RH	2023-12-01
5A, 12	**1004426-L**	STS UPPER EXTRUSION & HANGER HD FOOTREST, SHORT LH	2023-12-01
5B, 12	**1004426-R**	STS UPPER EXTRUSION & HANGER HD FOOTREST, SHORT RH	2023-12-01
5C, 12	**1004427-L**	STS UPPER EXTRUSION & HANGER, HD FTREST, LONG LH	2023-12-01
5D, 12	**1004427-R**	STS UPPER EXTRUSION & HANGER, HD FTREST, LONG RH	2023-12-01
6	**1004455**	AS LEGREST LOWER EXTRUSION ASS'Y	2023-12-01
7A	**1004430**	AS ANGLE ADJ. FOOTPLATE SUPPORT BRACKET ASS'Y	2023-12-01
7B	**1004431**	AS FIXED FOOTPLATE SUPPORT BRACKET ASS'Y	2023-12-01
8A	**1004686**	X-SMALL, O-S PED. FOOTPLATE 95X205 MM (3.75X8 IN)	2023-12-01
8B	**1002854**	S FOOTPLATE 130x205MM (5x8IN)	2022-08-08
8C	**1003194**	M FOOTPLATE 155x205MM (6x8IN)	2022-08-08
8D	**1003195**	STD FOOTPLATE 180x205MM (7x8IN)	2022-08-08
8E	**1003196**	L FOOTPLATE 205x205MM (8x8IN)	2022-08-08
8F	**1004050**	XL FOOTPLATE 243x205MM (9x8IN)	2022-08-08
8G	**1003646**	OVERSIZED FOOTPLATE, XSMALL, 90x255MM (3.5x10IN)	2021-09-14
8H	**1001682**	OVERSIZED FOOTPLATE, SMALL, 130x255MM (5x10IN)	2021-09-14
8I	**1001666**	OVERSIZED FOOTPLATE, MEDIUM, 155x255MM (6x10IN)	2021-09-14
8J	**1001665**	OVERSIZED FOOTPLATE, STANDARD, 180x255MM (7x10IN)	2021-09-14
8K	**1001664**	OVERSIZED FOOTPLATE, LARGE, 205x255MM (8x10IN)	2021-09-14
8L	**1001663**	OVERSIZED FOOTPLATE, XLARGE, 243x255MM (9x10IN)	2021-09-14
9A	**1001397**	HEEL LOOP ASSEMBLY - STANDARD	2020-07-01
9B	**1001398**	HEEL LOOP ASSEMBLY - LARGE SIZE	2020-07-01
10A	**H00112**	CALF PAD, SMALL, 130x155MM (5x6IN)	2022-12-12
10B	**H00111**	CALF PAD, MEDIUM, 155x180MM (6x7IN)	2022-12-12
10C	**H00113**	CALF PAD, LARGE, 205x180MM (8x7IN)	2022-12-12
10D	**H00114**	CALF PAD, XLARGE, 255x205MM (10x8IN)	2018-09-21
11A	**1003185-L**	AS, STD CALF PAD MOUNTING BRACKET, LH	2023-12-01
11B	**1003185-R**	AS, STD CALF PAD MOUNTING BRACKET, RH	2023-12-01
11C	**1004044-L**	AS, HD CALF PAD MOUNTING BRACKET, LH	2023-12-01
11D	**1004044-R**	AS, HD CALF PAD MOUNTING BRACKET, RH	2023-12-01
12	**1004432**	PROTECTION PAD, STS HD FOOTREST	2023-12-01

ITEM #	PART #	DESCRIPTION	EFFECTIVE
1, 2, 3A, 4A, 5A, 6, 12	**1004755-L**	STS PWR LEG STD, 318-445MM/12.5-17.5" EBX,LH	2023-12-01
1, 2, 3B, 4B, 5B, 6, 12	**1004755-R**	STS PWR LEG STD, 318-445MM/12.5-17.5" EBX,RH	2023-12-01
1, 2, 3A, 4A, 5C, 6, 12	**1004756-L**	STS PWR LEG STD, 368-495MM/14.5-19.5" EBX,LH	2023-12-01
1, 2, 3B, 4B, 5D, 6, 12	**1004756-R**	STS PWR LEG STD, 368-495MM/14.5-19.5" EBX,RH	2023-12-01
1, 2, 3C, 4A, 5A, 6, 12	**1004757-L**	STS PWR LEG HD, 318-445MM/12.5-17.5" EBX, LH	2023-12-01
1, 2, 3D, 4B, 5B, 6, 12	**1004757-R**	STS PWR LEG HD, 318-445MM/12.5-17.5" EBX, RH	2023-12-01
1, 2, 3C, 4A, 5C, 6, 12	**1004758-L**	STS PWR LEG HD, 368-495MM/14.5-19.5" EBX, LH	2023-12-01
1, 2, 3D, 4B, 5D, 6, 12	**1004758-R**	STS PWR LEG HD, 368-495MM/14.5-19.5" EBX, RH	2023-12-01

MANUAL ELEVATING AND ARTICULATING LEGREST

ITEM #	PART #	DESCRIPTION	EFFECTIVE
12A	A92150	HD LEGREST, UPPER TUBE, 318-395 MM (12.5 IN-15.5IN)	2011-08-19
12B	A92130	HD LEGREST, UPPER TUBE, 368-495 MM (14.5 IN-19.5IN)	2011-08-19
13A	A92152	HD LEGREST, LOWER TUBE LH 318-395 MM (12.5 IN-15.5IN)	2011-08-19
13B	A92151	HD LEGREST, LOWER TUBE RH 318-395 MM (12.5 IN-15.5IN)	2011-08-19
13C	A92140	HD LEGREST, LOWER TUBE LH 368-495 MM (14.5 IN-19.5IN)	2011-08-19
13D	A92135	HD LEGREST, LOWER TUBE RH 368-495 MM (14.5 IN-19.5IN)	2011-08-19
14A	C-92172	ADULT FIXED HD FOOTPLATE ADAPTER KIT	2012-01-10
14B	C-92170	ADULT ANGLE ADJUSTABLE HD FOOTPLATE ADAPTER KIT	2012-01-10
15A	A9241	XSMALL FOOTPLATE, 90 MM (3.5 IN) W X 205 MM (8 IN) D	2008-04-30
15B	1002854	S FOOTPLATE, 130 MM (5 IN) W X 205 MM (8 IN) D	2022-08-08
15C	1003194	M FOOTPLATE, 155 MM (6 IN) W X 205 MM (8 IN) D	2022-08-08
15D	1003195	STD FOOTPLATE, 180 MM (7 IN) W X 205 MM (8 IN) D	2022-08-08
15E	1003196	L FOOTPLATE, 205 MM (8 IN) W X 205 MM (8 IN) D	2022-08-08
15F	1004050	X L FOOTPLATE, 243 MM (9.5 IN) W X 205 MM (8 IN) D	2022-08-08
15G	1003646	OVERSIZED FOOTPLATE, XSMALL, 90 MM (3.5 IN) W X 255 MM (10 IN) D	2020-07-22
15H	1001682	OVERSIZED FOOTPLATE, SMALL, 130 MM (5 IN) W X 255 MM (10 IN) D	2020-07-22
15I	1001666	OVERSIZED FOOTPLATE, MEDIUM, 155 MM (6 IN) W X 255 MM (10 IN) D	2020-07-22
15J	1001665	OVERSIZED FOOTPLATE, STANDARD, 180 MM (7 IN) W X 255 MM (10 IN) D	2020-07-22
15K	1001664	OVERSIZED FOOTPLATE, LARGE, 205 MM (8 IN) W X 255 MM (10 IN) D	2020-01-03
15L	1001663	OVERSIZED FOOTPLATE, X-LARGE, 243 MM (9.5 IN) W X 255 MM (10 IN) D	2020-07-22
16A	1001397	HEEL LOOP ASSEMBLY - STANDARD	2021-02-01
16B	1001398	HEEL LOOP ASSEMBLY - LARGE SIZE	2021-02-01
17A	H00112	CALF PAD, SMALL, 130 MM X 155 MM (5 IN X 6 IN)	2015-04-13
17B	H00111	CALF PAD, MEDIUM, 155 MM X 180 MM (6 IN X 7 IN)	2015-04-13
17C	H00113	CALF PAD, LARGE, 205 MM X 180 MM (8 IN X 7 IN)	2015-04-13
17D	H00114	CALF PAD, EXTRA LARGE, 155 MM X 180 MM (10 IN X 8 IN)	2015-04-13
18A	C-92210	STD CALF PAD MOUNTING BRACKET	2014-01-16
18B	C-92209	HD CALF PAD MOUNTING BRACKET	2014-01-16
19	C-92173	PROTECTION PAD HD FOOT REST	2011-08-19
1-3,6A,7A,8,9	1004106	STS HOLD/RELEASE MECH, MAN.ELEV. LEGRST ASS'Y LEFT	2022-08-01
1-3,6B,7B,8,9	1004107	STS HOLD/RELEASE MECH, MAN.ELEV. LEGRST ASS'Y RIGHT	2022-08-01
4,5,10A	C-92175	LH ARTICULATING RECEIVER	2011-06-21
4,5,10B	C-92174	RH ARTICULATING RECEIVER	2011-06-21
4,5,10A,11A,12A, 13A,19	1003045	KIT, MANUAL ELEV./ ART. LEGRESTS (12.5-15.5 IN) LH	2021-05-07
4,5,10B,11B,12A, 13B,19	1003076	KIT, MANUAL ELEV./ ART. LEGRESTS (12.5-15.5 IN) RH	2021-05-07
4,5,10A,11A,12B, 13C,19	1003077	KIT, MANUAL ELEV./ ART. LEGRESTS (14.5-19.5 IN) LH	2021-05-07
4,5,10B,11B,12B, 13D,19	1003078	KIT, MANUAL ELEV./ ART. LEGRESTS (14.5-19.5 IN) RH	2021-05-07

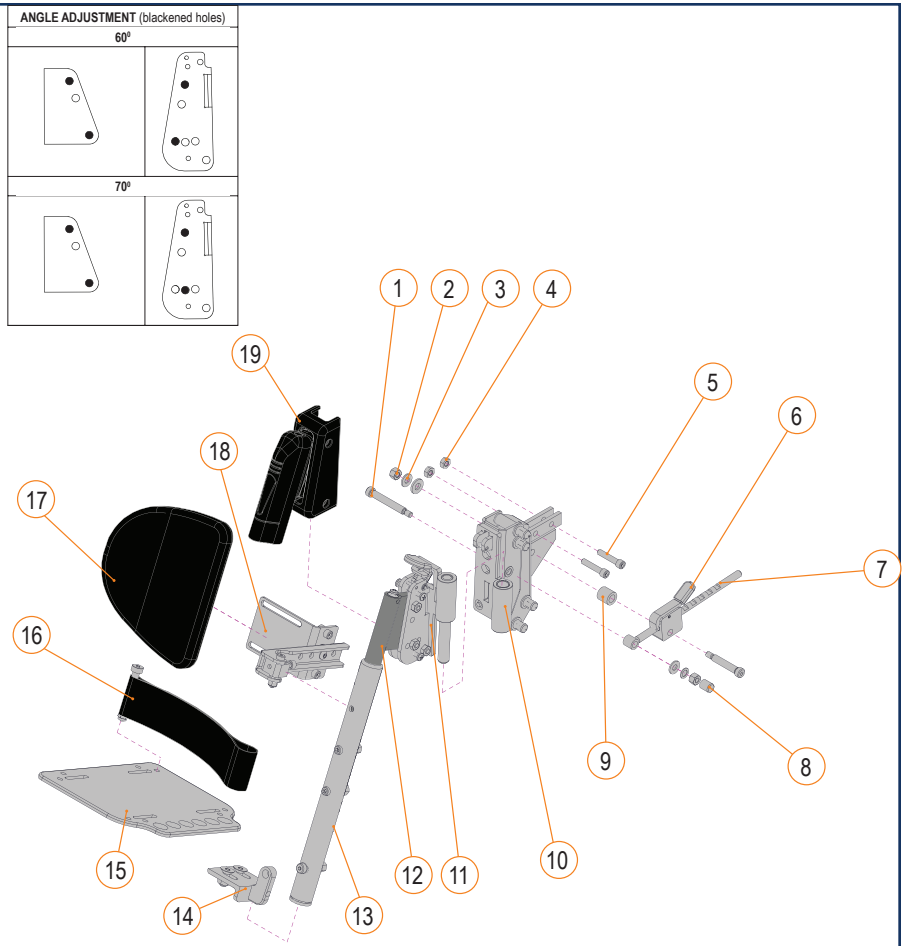

# PART	DESCRIPTION	WIDTH X DEPTH	SEAT WIDTH
A9241	XSMALL FOOTPLATE	90 MM (3.5 IN) W X 205 MM (8 IN) D	280-330 MM (11-13 IN)
1002854	SMALL FOOTPLATE	130 MM (5 IN) W X 205 MM (8 IN) D	355-380 MM (14-15 IN)
1003194	MEDIUM FOOTPLATE	155 MM (6 IN) W X 205 MM (8 IN) D	405-430 MM (16-17 IN)
1003195	STANDARD FOOTPLATE	180 MM (7 IN) W X 205 MM (8 IN) D	455-485 MM (18-19 IN)
1003196	LARGE FOOTPLATE	205 MM (8 IN) W X 205 MM (8 IN) D	510-560 MM (20-22 IN)
1004050	X LARGE FOOTPLATE	243 MM (9.5 IN) W X 205 MM (8 IN) D	585-710 MM (23-28 IN)
1003646	OVERSIZED FOOTPLATE, X-SMALL	90 MM (3.5 IN) W X 255 MM (10 IN) D	280-330 MM (11-13 IN)
1001682	OVERSIZED FOOTPLATE, SMALL	130 MM (5 IN) W X 255 MM (10 IN) D	355-380 MM (14-15 IN)
1001666	OVERSIZED FOOTPLATE, MEDIUM	155 MM (6 IN) W X 255 MM (10 IN) D	405-430 MM (16-17 IN)
1001665	OVERSIZED FOOTPLATE, STANDARD	180 MM (7 IN) W X 255 MM (10 IN) D	455-485 MM (18-19 IN)
1001664	OVERSIZED FOOTPLATE, LARGE	205 MM (8 IN) W X 255 MM (10 IN) D	510-560 MM (20-22 IN)
1001663	OVERSIZED FOOTPLATE, X-LARGE	243 MM (9.5 IN) W X 255 MM (10 IN) D	585-710 MM (23-28 IN)

SIGNATURE MANUAL ELEVATING AND ARTICULATING SWING-AWAY LEGREST

SEE DESCRIPTION ON FOLLOWING PAGE

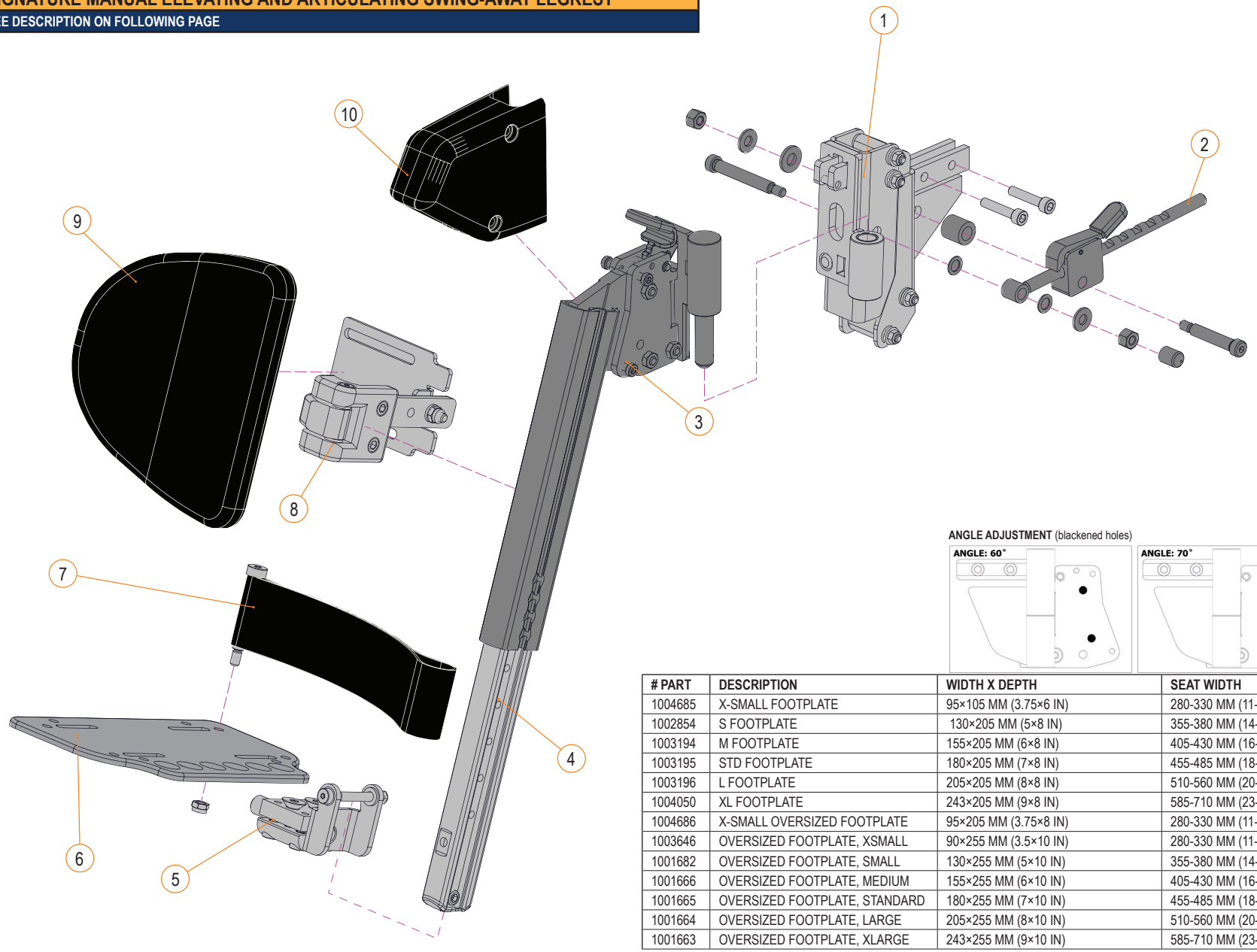

ANGLE ADJUSTMENT (blackened holes)

# PART	DESCRIPTION	WIDTH X DEPTH	SEAT WIDTH
1004685	X-SMALL FOOTPLATE	95×105 MM (3.75×6 IN)	280-330 MM (11-13 IN)
1002854	S FOOTPLATE	130×205 MM (5×8 IN)	355-380 MM (14-15 IN)
1003194	M FOOTPLATE	155×205 MM (6×8 IN)	405-430 MM (16-17 IN)
1003195	STD FOOTPLATE	180×205 MM (7×8 IN)	455-485 MM (18-19 IN)
1003196	L FOOTPLATE	205×205 MM (8×8 IN)	510-560 MM (20-22 IN)
1004050	XL FOOTPLATE	243×205 MM (9×8 IN)	585-710 MM (23-28 IN)
1004686	X-SMALL OVERSIZED FOOTPLATE	95×205 MM (3.75×8 IN)	280-330 MM (11-13 IN)
1003646	OVERSIZED FOOTPLATE, XSMALL	90×255 MM (3.5×10 IN)	280-330 MM (11-13 IN)
1001682	OVERSIZED FOOTPLATE, SMALL	130×255 MM (5×10 IN)	355-380 MM (14-15 IN)
1001666	OVERSIZED FOOTPLATE, MEDIUM	155×255 MM (6×10 IN)	405-430 MM (16-17 IN)
1001665	OVERSIZED FOOTPLATE, STANDARD	180×255 MM (7×10 IN)	455-485 MM (18-19 IN)
1001664	OVERSIZED FOOTPLATE, LARGE	205×255 MM (8×10 IN)	510-560 MM (20-22 IN)
1001663	OVERSIZED FOOTPLATE, XLARGE	243×255 MM (9×10 IN)	585-710 MM (23-28 IN)

SIGNATURE MANUAL ELEVATING AND ARTICULATING SWING-AWAY LEGREST

ITEM #	PART #	DESCRIPTION	EFFECTIVE
1A	**1004429-L**	ASS'Y, AS ARTICULATING LEGREST RECEIVER, LH	2023-12-01
1B	**1004429-R**	ASS'Y, AS ARTICULATING LEGREST RECEIVER, RH	2023-12-01
2A	**1004106**	KIT, HOLD/RELEASE MECHANISM, MAN.ELEV. LEGREST, LH	2022-07-13
2B	**1004107**	KIT, HOLD/RELEASE MECHANISM, MAN.ELEV. LEGREST, RH	2022-07-13
3A, 10	**1004426-L**	AS UPPER EXTRUSION & HANGER, HD FOOTREST, SHORT LH (320-445MM, 12.5-17.5IN)	2023-12-01
3B, 10	**1004426-R**	AS UPPER EXTRUSION & HANGER, HD FOOTREST, SHORT RH (320-445MM, 12.5-17.5IN)	2023-12-01
3C, 10	**1004427-L**	AS UPPER EXTRUSION & HANGER, HD FTREST, LONG LH (370-495MM, 14.5-19.5IN)	2023-12-01
3D, 10	**1004427-R**	AS UPPER EXTRUSION & HANGER, HD FTREST, LONG RH (370-495MM, 14.5-19.5IN)	2023-12-01
4	**1004455**	AS LEGREST LOWER EXTRUSION ASS'Y	2023-12-01
5A	**1004430**	AS ANGLE ADJ. FOOTPLATE SUPPORT BRACKET ASS'Y	2023-12-01
5B	**1004431**	AS FIXED FOOTPLATE SUPPORT BRACKET ASS'Y	2023-12-01
6A	**1004686**	XS FOOTPLATE 95x205MM (3.75x8IN)	2023-12-01
6B	**1002854**	S FOOTPLATE 130x205MM (5x8IN)	2022-08-08
6C	**1003194**	M FOOTPLATE 155x205MM (6x8IN)	2022-08-08
6D	**1003195**	STD FOOTPLATE 180x205MM (7x8IN)	2022-08-08
6E	**1003196**	L FOOTPLATE 205x205MM (8x8IN)	2022-08-08
7F	**1004050**	XL FOOTPLATE 243x205MM (9x8IN)	2022-08-08
6G	**1003646**	OVERSIZED FOOTPLATE, XSMALL, 90x255MM (3.5x10IN)	2021-09-14
6H	**1001682**	OVERSIZED FOOTPLATE, SMALL, 130x255MM (5x10IN)	2021-09-14
6I	**1001666**	OVERSIZED FOOTPLATE, MEDIUM, 155x255MM (6x10IN)	2021-09-14
6J	**1001665**	OVERSIZED FOOTPLATE, STANDARD, 180x255MM (7x10IN)	2021-09-14
6K	**1001664**	OVERSIZED FOOTPLATE, LARGE, 205x255MM (8x10IN)	2021-09-14
6L	**1001663**	OVERSIZED FOOTPLATE, XLARGE, 243x255MM (9x10IN)	2021-09-14
7A	**1001397**	HEEL LOOP ASSEMBLY - STANDARD	2020-07-01
7B	**1001398**	HEEL LOOP ASSEMBLY - LARGE SIZE	2020-07-01
8A	**1003185-L**	AS, STD CALF PAD MOUNTING BRACKET, LH	2023-12-01
8B	**1003185-R**	AS, STD CALF PAD MOUNTING BRACKET, RH	2023-12-01
8C	**1004044-L**	AS, HD CALF P AD MOUNTING BRACKET, LH	2023-12-01
8D	**1004044-R**	AS, HD CALF PAD MOUNTING BRACKET, RH	2023-12-01
9A	**H00112**	CALF PAD, SMALL, 130x155MM (5x6IN)	2022-12-12
9B	**H00111**	CALF PAD, MEDIUM, 155x180MM (6x7IN)	2022-12-12
9C	**H00113**	CALF PAD, LARGE, 205x180MM (8x7IN)	2022-12-12
9D	**H00114**	CALF PAD, XLARGE, 255x205MM (10x8IN)	2018-09-21
10	**1004432**	PROTECTION PAD, AS HD FOOTREST	2023-12-01
1A, 2A, 3A, 4, 10	**1004911-L**	KIT, STS MAN ELEV/ART LEGS, 12.5-17.5IN, LH	2023-12-01
1B, 2B, 3B, 4, 10	**1004911-R**	KIT, STS MAN ELEV/ART LEGS, 12.5-17.5IN, RH	2023-12-01
1A, 2A, 3C, 4, 10	**1004912-L**	KIT, STS MAN ELEV/ART LEGS, 14.5-19.5IN, LH	2023-12-01
1B, 2B, 3D, 4, 10	**1004912-R**	KIT, STS MAN ELEV/ART LEGS, 14.5-19.5IN, RH	2023-12-01

FRONT FOOTPLATE BUMPER WHEEL

ITEM #	PART #	DESCRIPTION	EFFECTIVE
1-3	**1003060**	KIT, WHEEL, FRONT FOOTPLATE BUMPER	2021-05-07

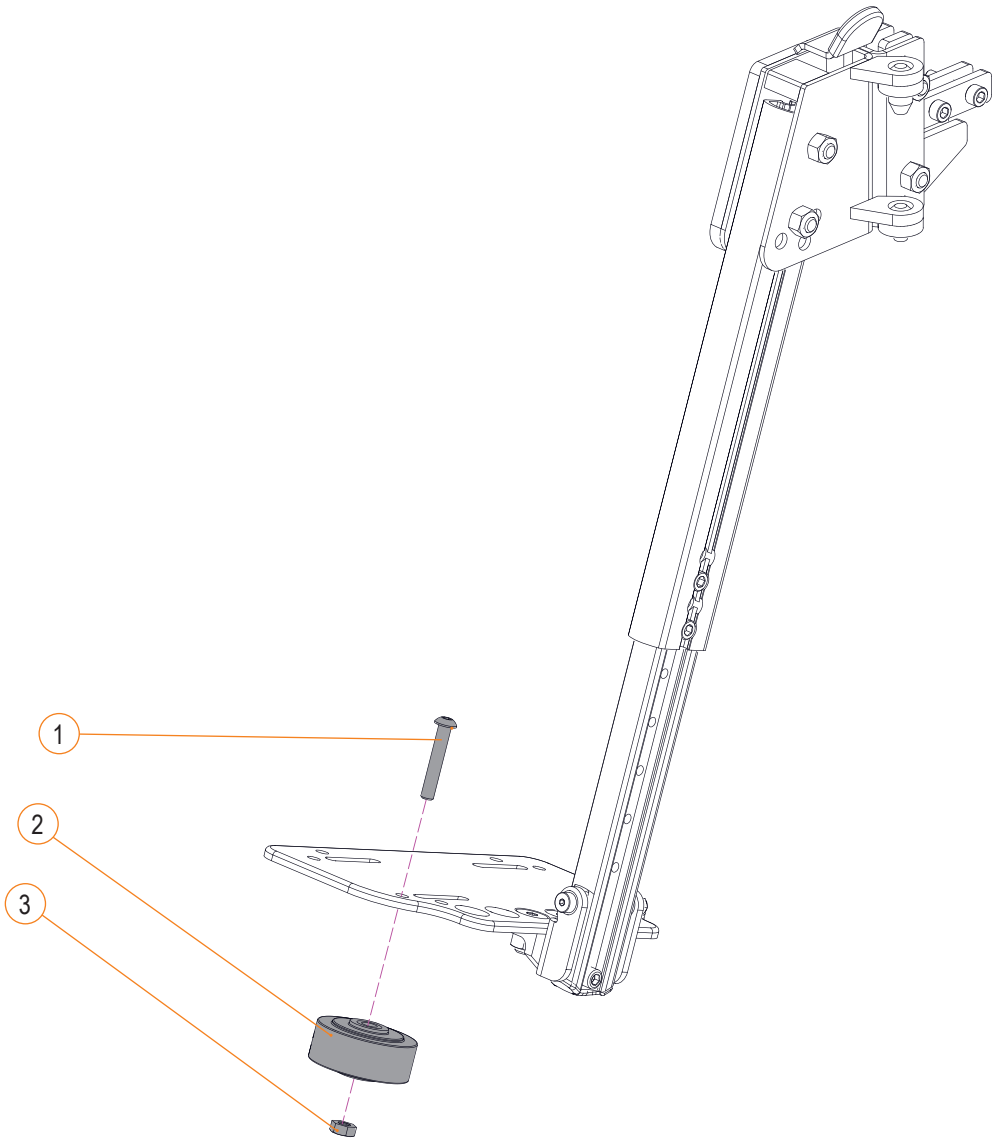

SINGLE AXIS HEADREST HARDWARE

ITEM #	PART #	DESCRIPTION	EFFECTIVE
1A	**H00091**	HEADREST PAD, SMALL, 105 MM X 230 MM (4 IN X 9 IN)	2009-05-06
1B	**H00092**	HEADREST PAD, MEDIUM, 130 MM X 255 MM (5 IN X 10 IN)	2009-05-06
1C	**H00093**	HEADREST PAD, LARGE, 155 MM X 280 MM (6 IN X 11 IN)	2009-05-06
2	**A93100**	SINGLE AXIS HEADREST MOUNTING	2008-08-19
3	**A93101**	MULTI-AXIS HEADREST MOUNTING	2008-10-10
4	**C-9343**	HEADREST MOUNTING HARDWARE FOR FIXED BACK	2008-08-19
5	**C-9334**	KIT, HEADREST SUPPORT FOR FIXED BACK	2008-09-04
6	**C-9341**	HEADREST MOUNTING HARDWARE FOR RECLINING BACK	2008-08-13
7	**C-9342**	OEM HEADREST SUPPORT ON AMYSYSTEMS POWER RECLINE	2008-08-13

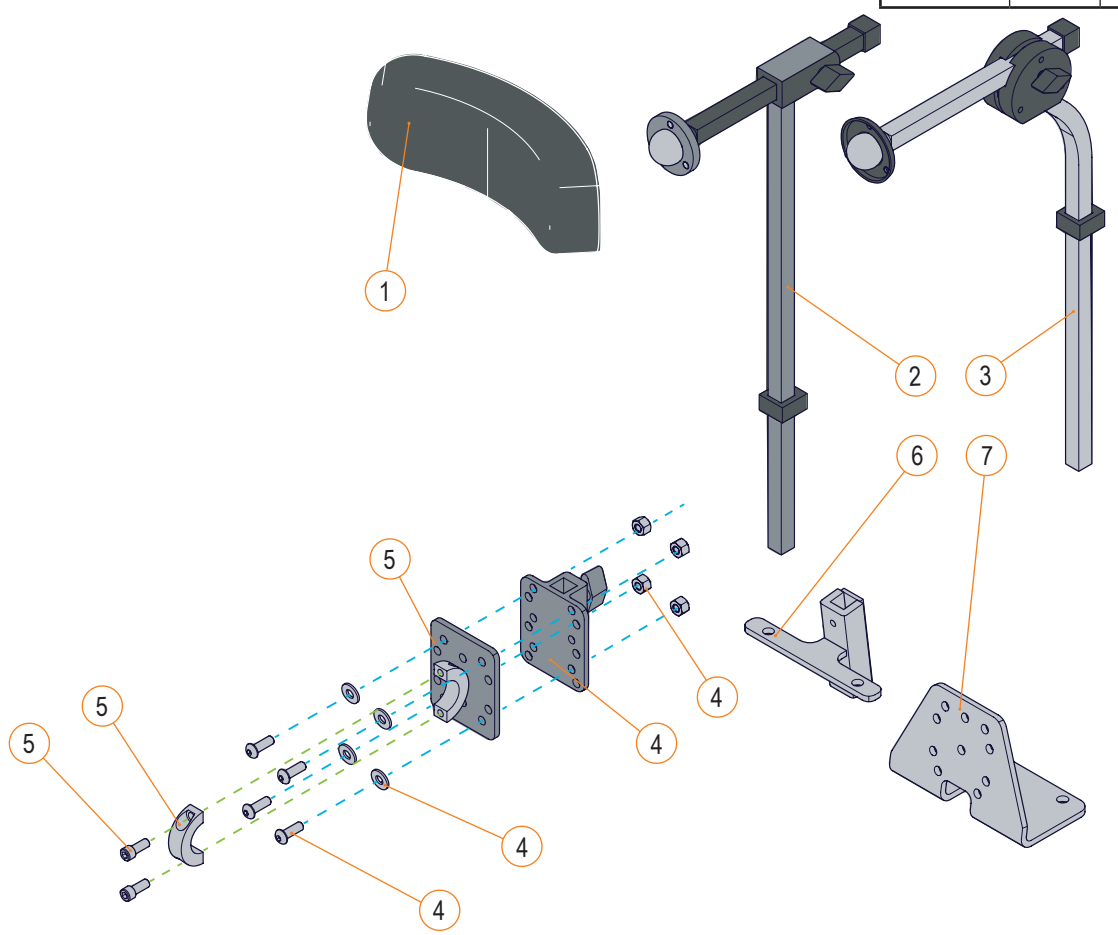

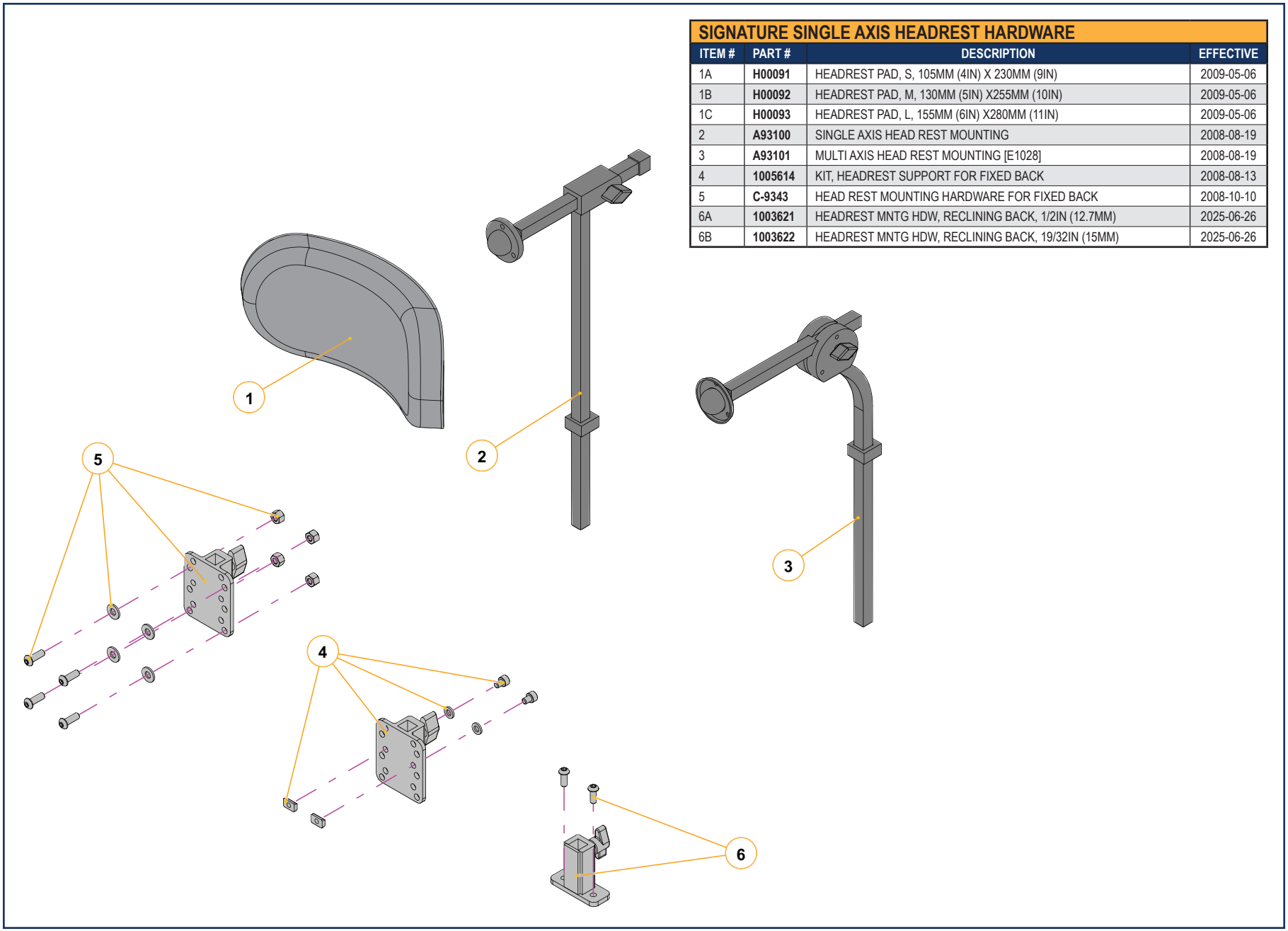

SIGNATURE SINGLE AXIS HEADREST HARDWARE			
ITEM #	PART #	DESCRIPTION	EFFECTIVE
1A	**H00091**	HEADREST PAD, S, 105MM (4IN) X 230MM (9IN)	2009-05-06
1B	**H00092**	HEADREST PAD, M, 130MM (5IN) X255MM (10IN)	2009-05-06
1C	**H00093**	HEADREST PAD, L, 155MM (6IN) X280MM (11IN)	2009-05-06
2	**A93100**	SINGLE AXIS HEAD REST MOUNTING	2008-08-19
3	**A93101**	MULTI AXIS HEAD REST MOUNTING [E1028]	2008-08-19
4	**1005614**	KIT, HEADREST SUPPORT FOR FIXED BACK	2008-08-13
5	**C-9343**	HEAD REST MOUNTING HARDWARE FOR FIXED BACK	2008-10-10
6A	**1003621**	HEADREST MNTG HDW, RECLINING BACK, 1/2IN (12.7MM)	2025-06-26
6B	**1003622**	HEADREST MNTG HDW, RECLINING BACK, 19/32IN (15MM)	2025-06-26

MULTI-AXIS HEADREST HARDWARE			
ITEM #	PART #	DESCRIPTION	EFFECTIVE
1A	**H00091**	HEADREST PAD, SMALL, 105 MM X 230 MM (4 IN X 9 IN)	2009-05-06
1B	**H00092**	HEADREST PAD, MEDIUM, 130 MM X 255 MM (5 IN X 10 IN)	2009-05-06
1C	**H00093**	HEADREST PAD, LARGE, 155 MM X 280 MM (6 IN X 11 IN)	2009-05-06
2, 3	**C-9301**	MULTI-AXIS HEADREST HARDWARE	2008-04-30
4	**C-9343**	HEADREST MOUNTING HARDWARE FOR FIXED BACK	2008-08-19
5	**C-9334**	KIT, HEADREST SUPPORT FOR FIXED BACK	2008-09-04
6	**C-9341**	HEADREST MOUNTING HARDWARE FOR RECLINING BACK	2008-08-13
7	**C-9342**	OEM HEADREST SUPPORT ON AMYSYSTEMS POWER RECLINE	2008-08-13

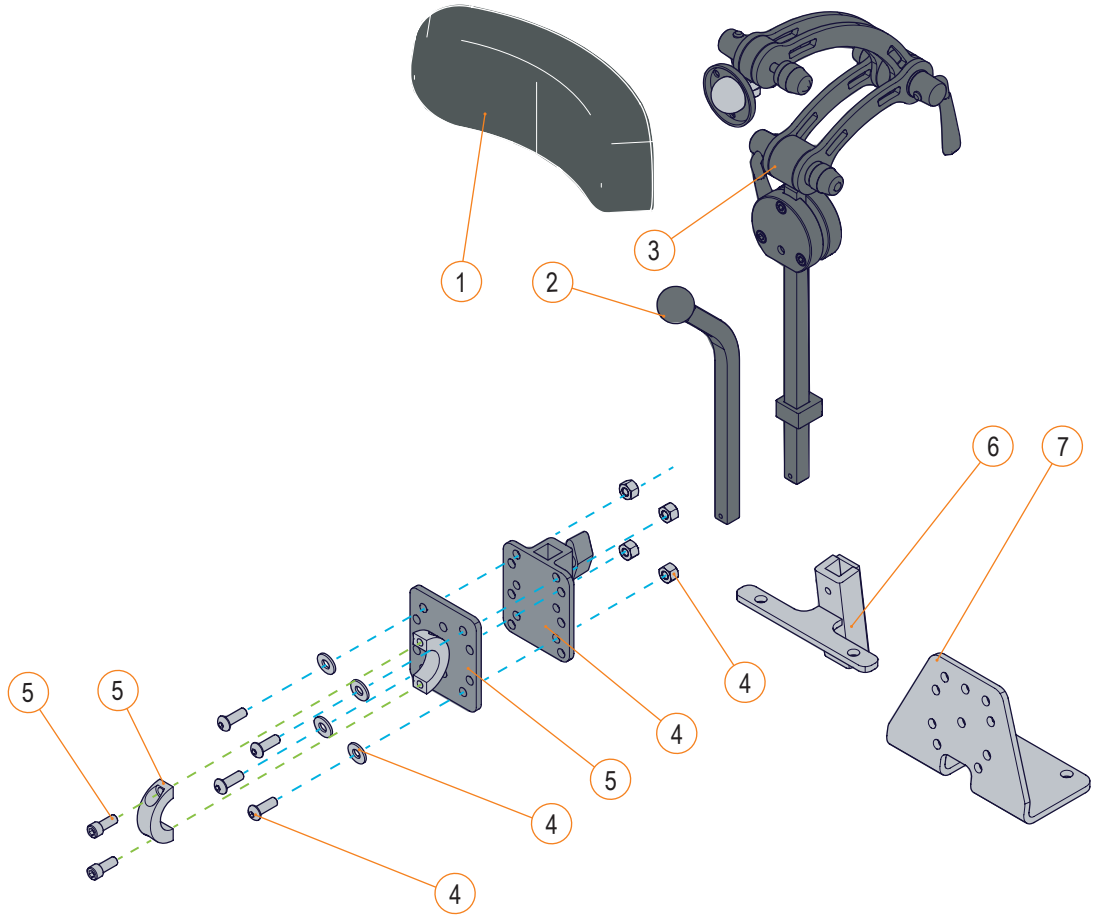

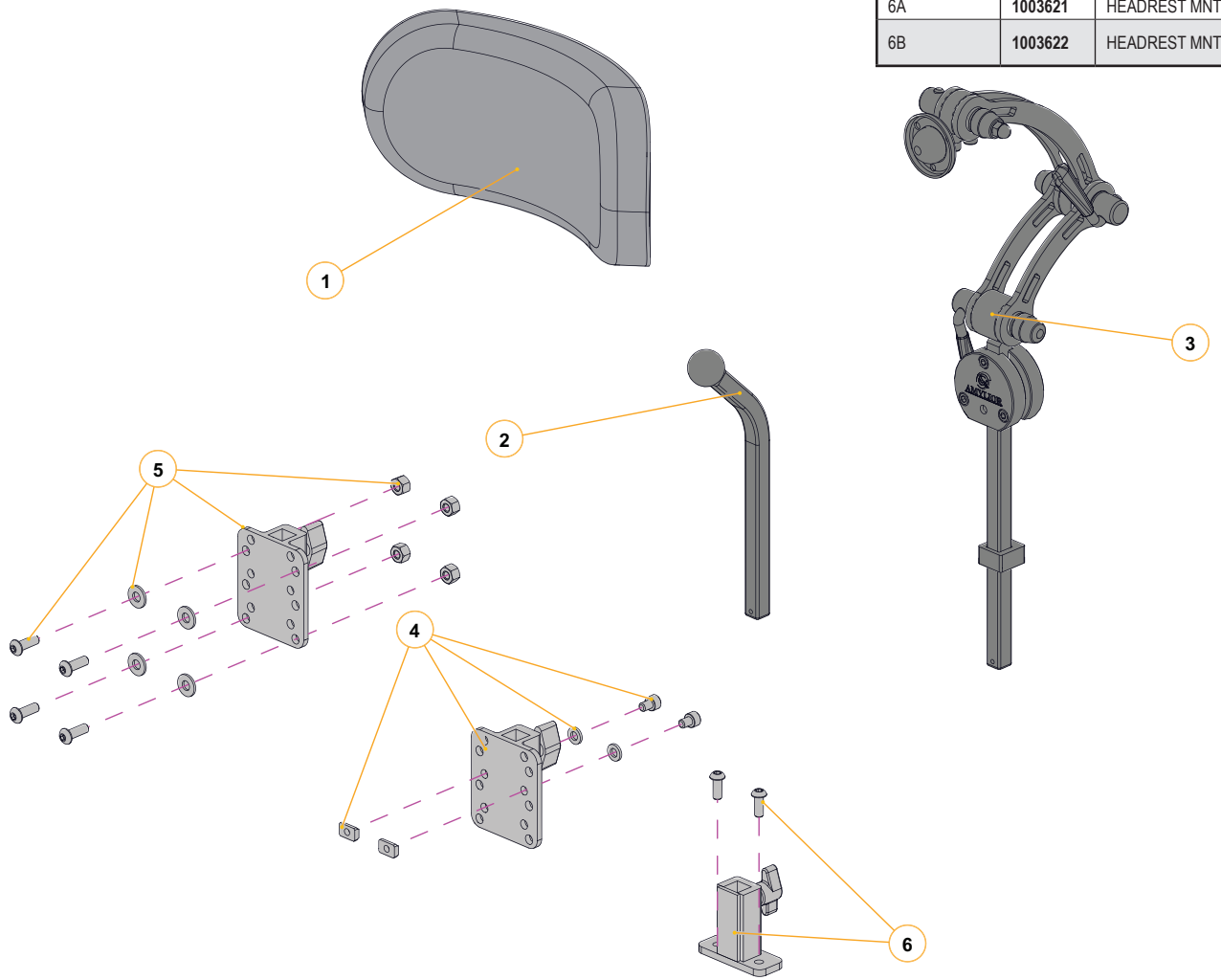

SIGNATURE MULTI-AXIS HEADREST HARDWARE			
ITEM #	PART #	DESCRIPTION	EFFECTIVE
1A	**H00091**	HEADREST PAD, S, 105MM (4IN) X 230MM (9IN)	2009-05-06
1B	**H00092**	HEADREST PAD, M, 130MM (5IN) X255MM (10IN)	2009-05-06
1C	**H00093**	HEADREST PAD, L, 155MM (6IN) X280MM (11IN)	2009-05-06
2, 3	**C-9301**	MULTI-AXIS HEADREST MOUNTING HARDWARE	2008-04-30
4	**1005614**	KIT, HEADREST SUPPORT FOR FIXED BACK	2025-06-26
5	**C-9343**	HEAD REST MOUNTING HARDWARE FOR FIXED BACK	2008-09-04
6A	**1003621**	HEADREST MNTG HDW, RECLINING BACK, 1/2IN (12.7MM)	2025-06-26
6B	**1003622**	HEADREST MNTG HDW, RECLINING BACK, 19/32IN (15MM)	2025-06-26

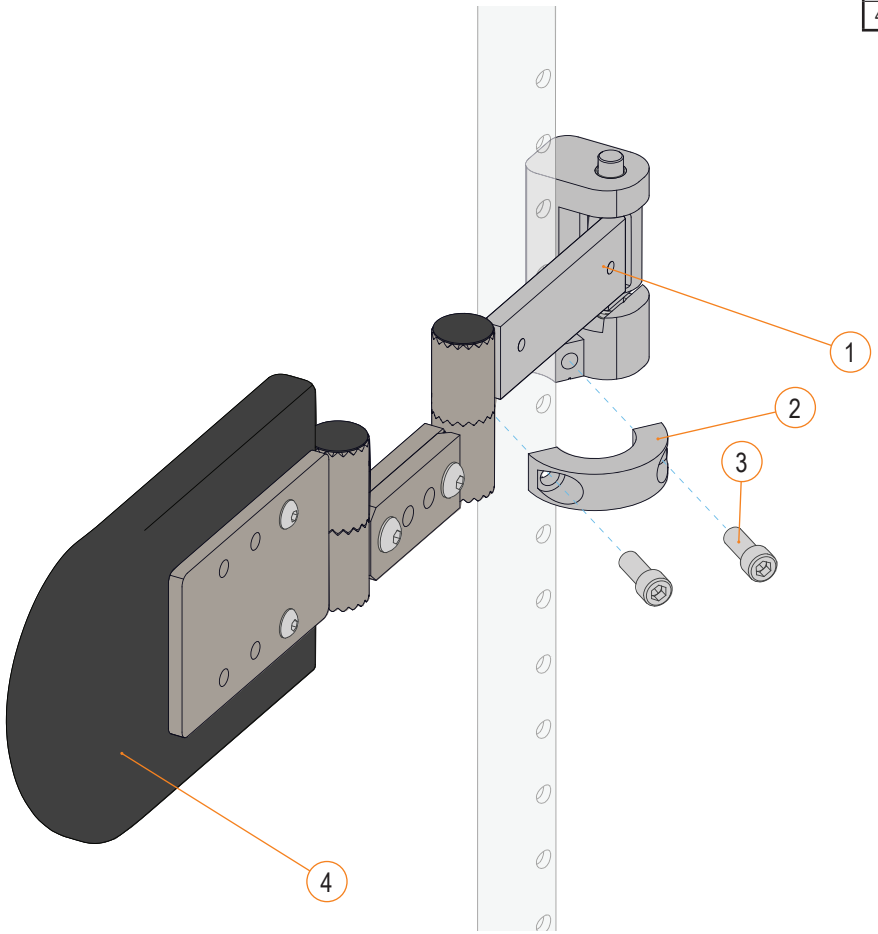

SWING AWAY LATERAL TRUNK SUPPORT			
ITEM #	PART #	DESCRIPTION	EFFECTIVE
1A, 2, 3	**C-9609**	SWING AWAY LATERAL TRUNK SUPPORT, LEFT HAND	2011-10-20
1B, 2, 3	**C-9610**	SWING AWAY LATERAL TRUNK SUPPORT, RIGHT HAND	2011-10-20
1C, 2, 3	**S-128672-01**	CUSTOM ADJ. S-A LATERAL SHORT HDW MOUNT, LH	2023-03-01
1D, 2, 3	**S-128672-02**	CUSTOM ADJ. S-A LATERAL SHORT HDW MOUNT, RH	2023-03-01
4A	**H00031**	LATERAL CURVED PAD, SMALL, 75 MM X 130 MM (3 IN X 5 IN)	2008-04-30
4B	**H00032**	LATERAL CURVED PAD, MEDIUM, 105 MM X 155 MM (4 IN X 6 IN)	2008-04-30
4C	**H00033**	LATERAL CURVED PAD, LARGE, 130 MM X 180 MM (5 IN X 7 IN)	2008-04-30

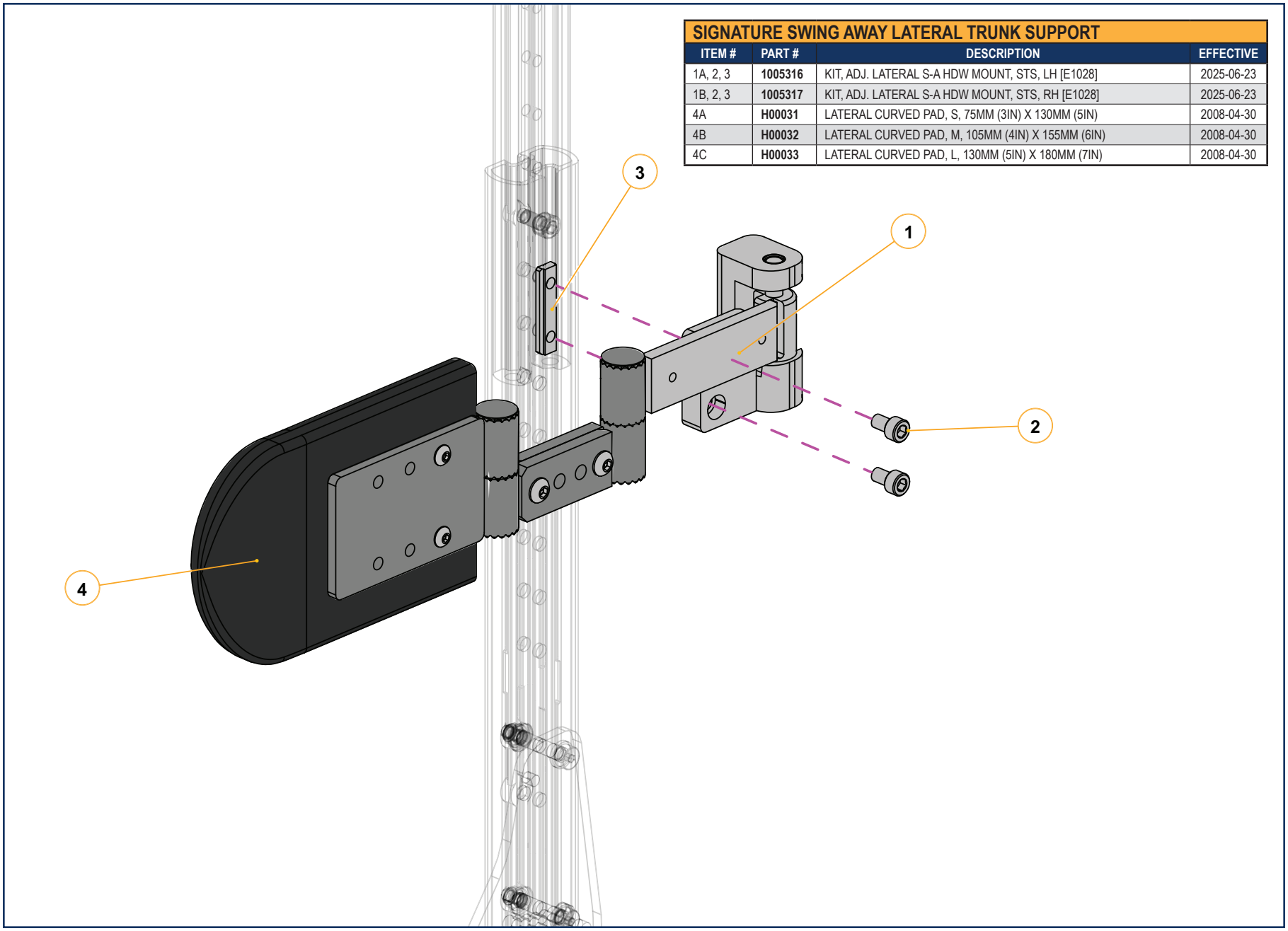

SIGNATURE SWING AWAY LATERAL TRUNK SUPPORT			
ITEM #	PART #	DESCRIPTION	EFFECTIVE
1A, 2, 3	**1005316**	KIT, ADJ. LATERAL S-A HDW MOUNT, STS, LH [E1028]	2025-06-23
1B, 2, 3	**1005317**	KIT, ADJ. LATERAL S-A HDW MOUNT, STS, RH [E1028]	2025-06-23
4A	**H00031**	LATERAL CURVED PAD, S, 75MM (3IN) X 130MM (5IN)	2008-04-30
4B	**H00032**	LATERAL CURVED PAD, M, 105MM (4IN) X 155MM (6IN)	2008-04-30
4C	**H00033**	LATERAL CURVED PAD, L, 130MM (5IN) X 180MM (7IN)	2008-04-30

THIGH GUARD HARDWARE AND PAD			
ITEM #	PART #	DESCRIPTION	EFFECTIVE
1A	H00097	THIGH PAD, SMALL, 105 MM X 255 MM (4 IN X 10 IN)	2010-12-21
1B	H00098	THIGH PAD, MEDIUM, 130 MM X 305 MM (5 IN X 12 IN)	2010-12-21
1C	H00099	THIGH PAD, LARGE, 155 MM X 355 MM (6 IN X 14 IN)	2010-12-21
2-7	C-9612	ADJUSTABLE REMOVABLE THIGH GUARD HARDWARE	2014-01-29

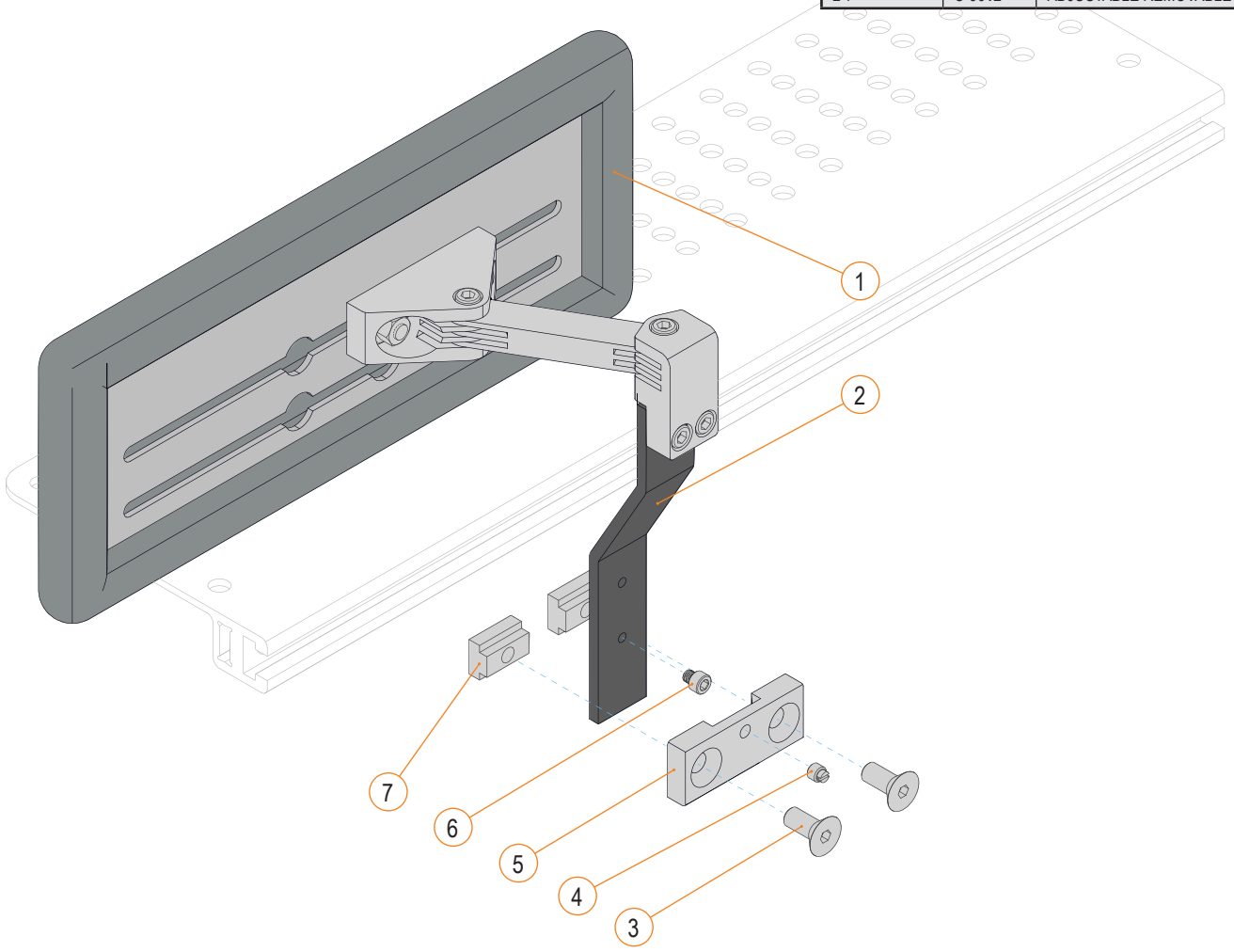

THIGH GUARD HARDWARE AND PAD			
ITEM #	PART #	DESCRIPTION	EFFECTIVE
1A	H00097	THIGH PAD, SMALL, 105 MM X 255 MM (4 IN X 10 IN)	2010-12-21
1B	H00098	THIGH PAD, MEDIUM, 130 MM X 305 MM (5 IN X 12 IN)	2010-12-21
1C	H00099	THIGH PAD, LARGE, 155 MM X 355 MM (6 IN X 14 IN)	2010-12-21
2-7	1004020	CURVED HIP & THIGH SUP. HDW, ADJ. & REM.	2022-02-05

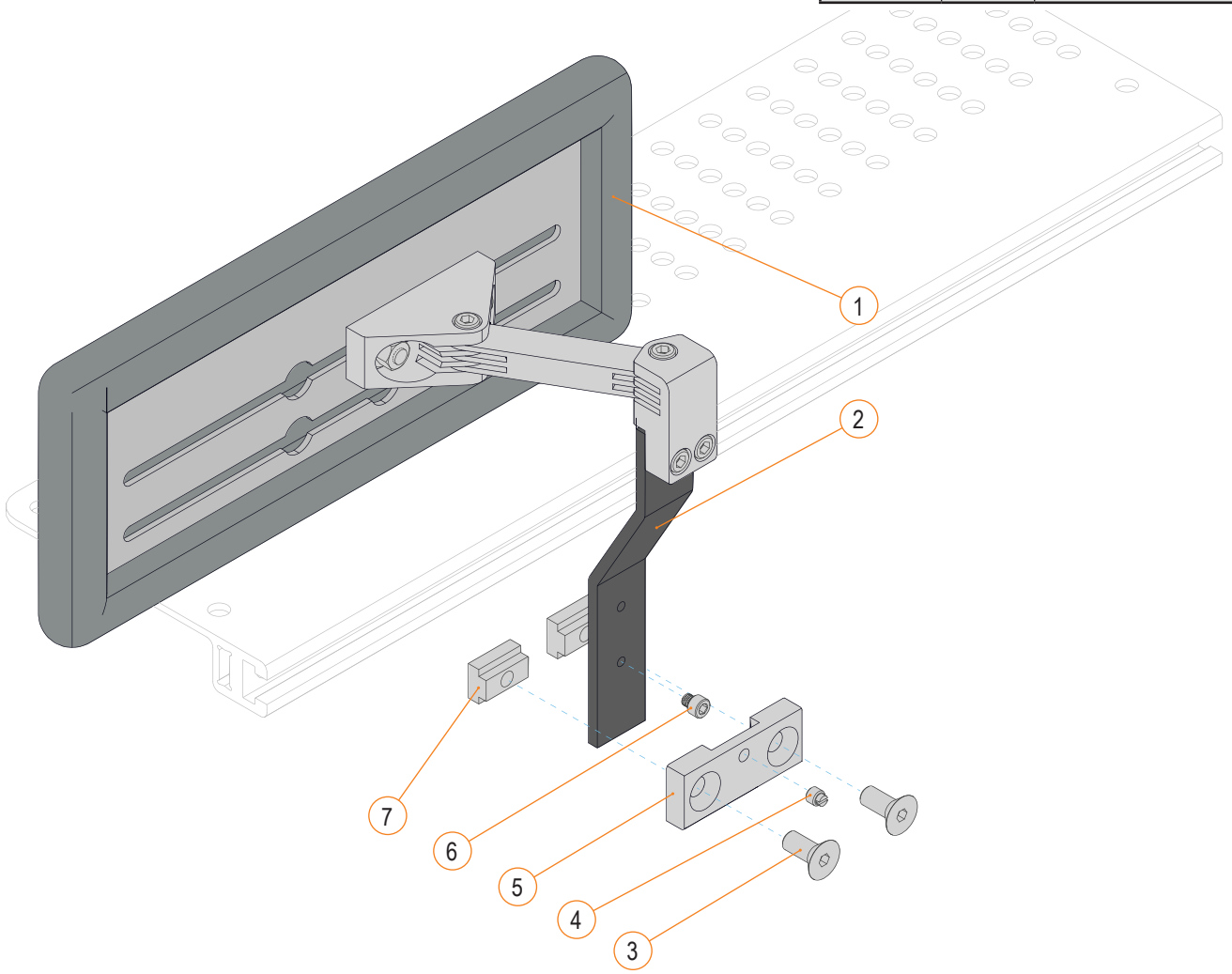

THIGH GUARD HARDWARE AND PAD			
ITEM #	PART #	DESCRIPTION	EFFECTIVE
1A	**H00097**	THIGH PAD, SMALL, 105 MM X 255 MM (4 IN X 10 IN)	2010-12-21
1B	**H00098**	THIGH PAD, MEDIUM, 130 MM X 305 MM (5 IN X 12 IN)	2010-12-21
1C	**H00099**	THIGH PAD, LARGE, 155 MM X 355 MM (6 IN X 14 IN)	2010-12-21
2-7	**1004021**	STRAIGHT HIP & THIGH SUP. HDW, ADJ. & REM.	2021-07-05

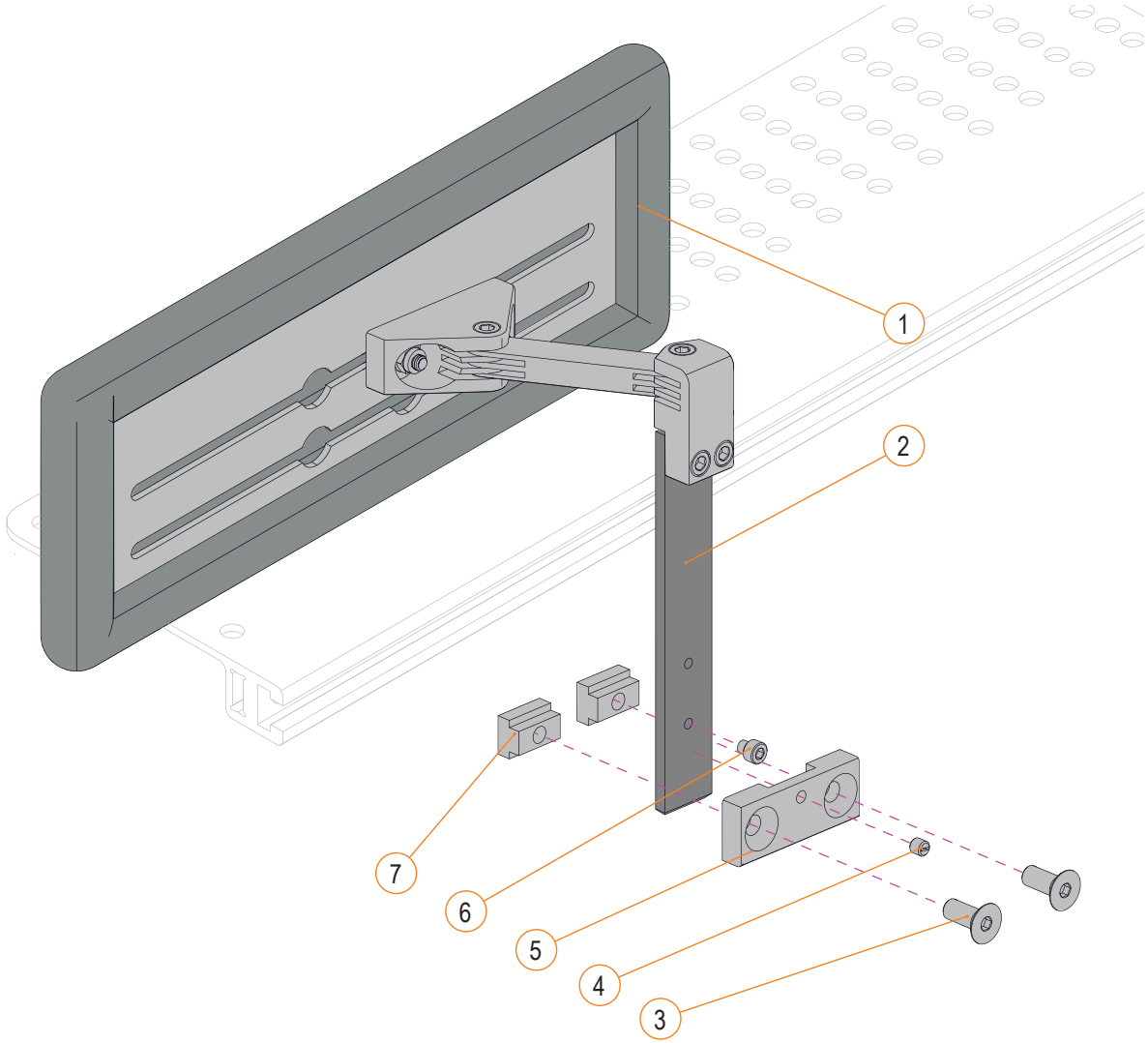

POSITIONNING STRAP			
ITEM #	PART #	DESCRIPTION	EFFECTIVE
1A, 2-4	C-9360	55 IN POSITIONNING STRAP, AUTO STYLE	2010-11-21
1B, 2-4	C-9361	80 IN POSITIONNING STRAP, AUTO STYLE	2010-11-21

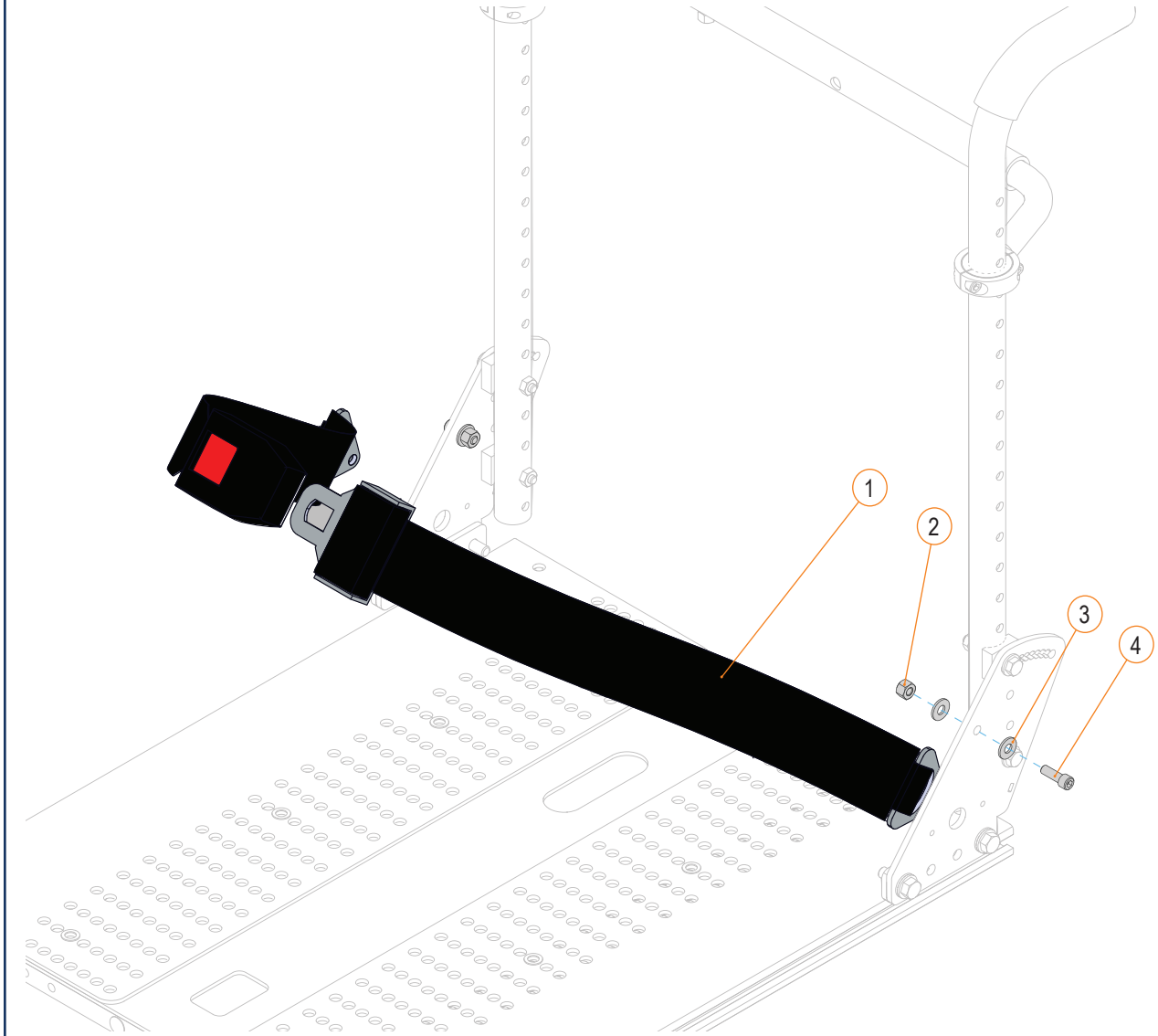

PADDED CHEST STRAP

ITEM #	PART #	DESCRIPTION	EFFECTIVE
1A, 2-5	**S-0244**	PADDED CHEST STRAP 14-17IN, 2-PT MAGNETIC CTR PULL	2019-09-03
1B, 2-5	**S-0245**	PADDED CHEST STRAP 18-21IN, 2-PT MAGNETIC CTR PULL	2019-09-03
1C, 2-5	**S-0246**	PADDED CHEST STRAP 22-24IN, 2-PT MAGNETIC CTR PULL	2019-09-03
1D, 2-5	**S-0247**	PADDED CHEST STRAP, BODYPOINT, 12.25IN	2018-04-10
1E, 2-5	**S-0248**	PADDED CHEST STRAP, BODYPOINT, 15.5IN	2018-04-10
1F, 2-5	**S-0249**	PADDED CHEST STRAP, BODYPOINT, 18.25IN	2018-04-10
1G, 2-5	**S-0250**	PADDED CHEST STRAP, BODYPOINT, 21.5IN	2018-04-10
1H, 2-5	**S-0251**	PADDED CHEST STRAP, BODYPOINT, 24.5IN	2018-04-10

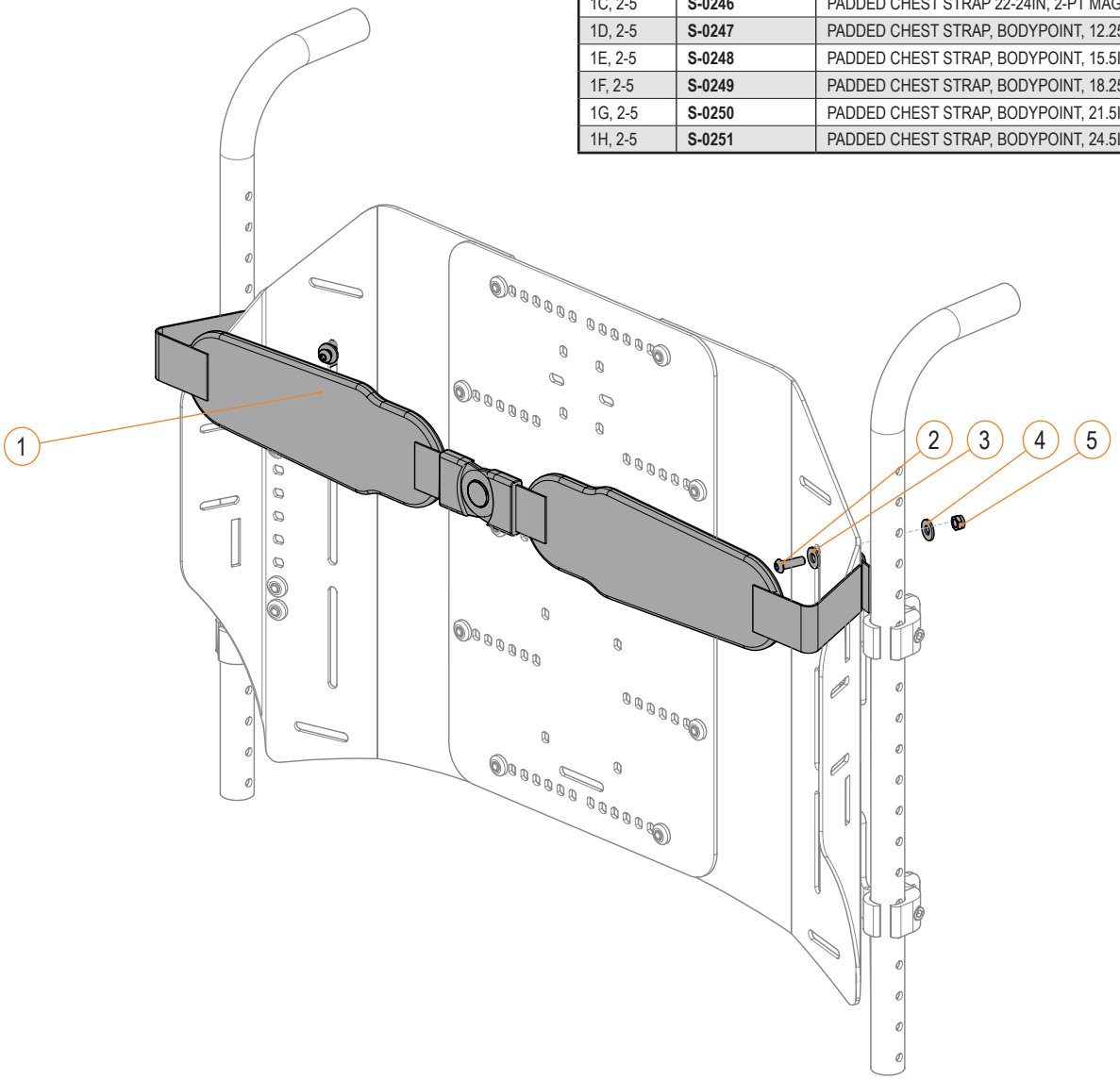

PADDED HIP BELT			
ITEM #	PART #	DESCRIPTION	EFFECTIVE
1A, 2-6	**S-0252**	PADDED HIP BELT 14-17IN, 2-PT MAGNETIC CTR PULL	2019-09-03
1B, 2-6	**S-0253**	PADDED HIP BELT 18-21IN, 2-PT MAGNETIC CTR PULL	2019-09-03
1C, 2-6	**S-0254**	PADDED HIP BELT 22-24IN, 2-PT MAGNETIC CTR PULL	2019-09-03
1D, 2-6	**S-0255**	PADDED HIP BELT (2-PT CTR PULL), BODYPOINT PT, 12.5IN	2018-04-10
1E, 2-6	**S-0256**	PADDED HIP BELT (2-PT CTR PULL), BODYPOINT PT, 14IN	2018-04-10
1F, 2-6	**S-0257**	PADDED HIP BELT (2-PT CTR PULL), BODYPOINT PT, 18IN	2018-04-10
1G, 2-6	**S-0258**	PADDED HIP BELT (2-PT CTR PULL), BODYPOINT PT, 24.5IN	2018-04-10
1H, 2-6	**S-0259**	PADDED HIP BELT (2-PT CTR PULL), BODYPOINT PT, 32IN	2018-04-10

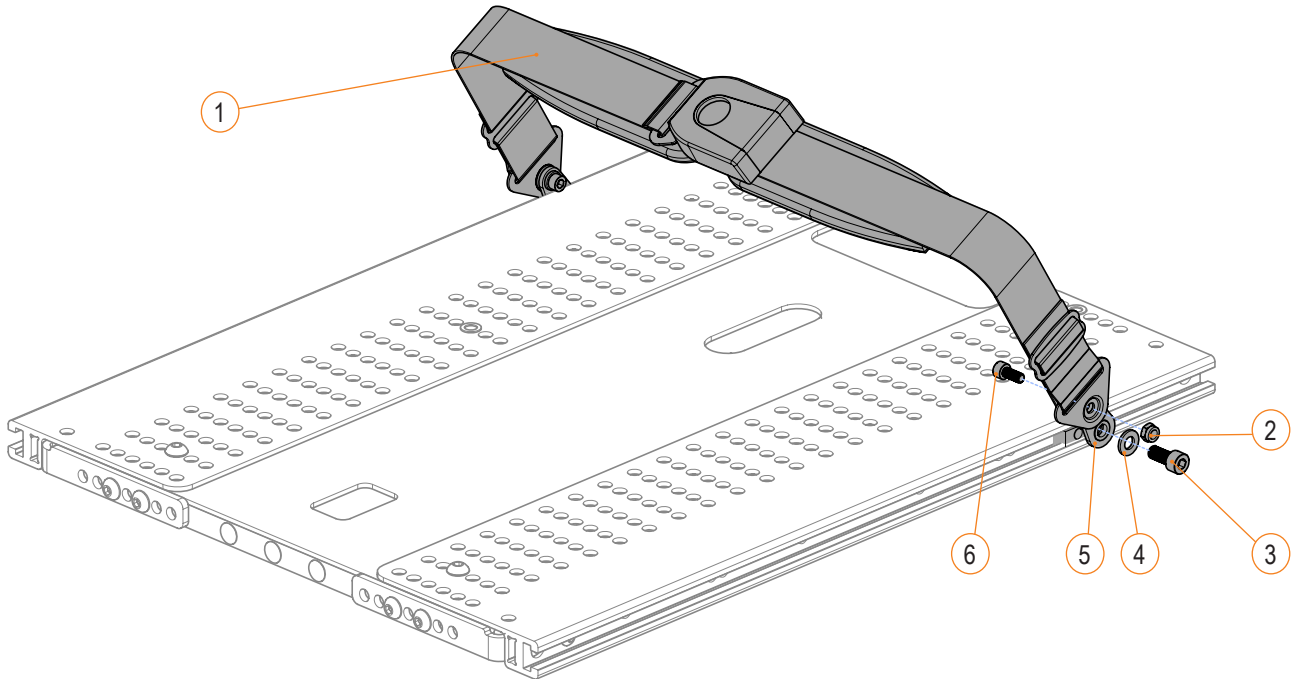

KNEE SUPPORT FOR ASCENT STANDING MODULE			
ITEM #	PART #	DESCRIPTION	PRIOR TO
1A	**S-0192**	ASSEMBLY, KNEE BLOCK RECEIVER - LH	2025-12-01
1B	**S-0193**	ASSEMBLY, KNEE BLOCK RECEIVER - RH	2025-12-01
2	**S-0187**	ASSEMBLY, KNEE SUPPORT PAD HARDWARE	2025-12-01
3	**S-0188**	KNEE SUPPORT PAD FOR STANDER	2025-12-01
4	**S-0191**	KNEE BLOCK BELT	2025-12-01
1A, 2, 5A	**S-0189**	ASSEMBLY, KNEE BLOCK SUPPORT - LH	2025-12-01
1B, 2, 5B	**S-0190**	ASSEMBLY, KNEE BLOCK SUPPORT - RH	2025-12-01

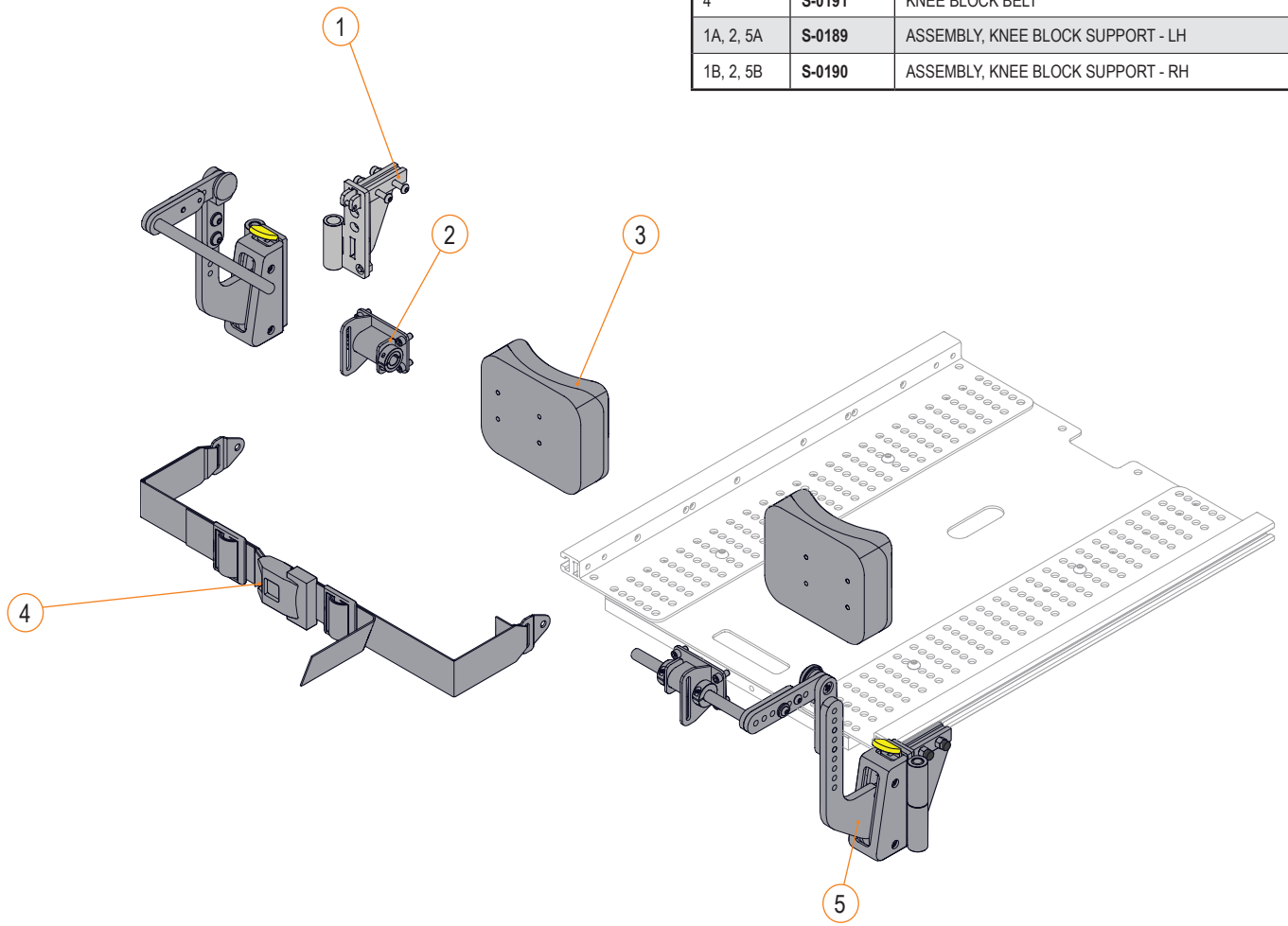

KNEE SUPPORT FOR ASCENT STANDING MODULE			
ITEM #	PART #	DESCRIPTION	EFFECTIVE
1A	**1004428-L**	ASS'Y, AS FOOTREST RECEIVER, HD, LH	2025-12-01
1B	**1004428-R**	ASS'Y, AS FOOTREST RECEIVER, HD, RH	2025-12-01
2	**S-0187**	ASSEMBLY, KNEE SUPPORT PAD HARDWARE	2025-12-01
3	**S-0188**	KNEE SUPPORT PAD FOR STANDER	2025-12-01
4	**S-0191**	KNEE BLOCK BELT	2025-12-01
1A, 2, 5A	**1005925-L**	ASSEMBLY, KNEE BLOCK RECEIVER - LH [E1028]	2025-12-01
1B, 2, 5B	**1005925-R**	ASSEMBLY, KNEE BLOCK RECEIVER - RH [E1028]	2025-12-01

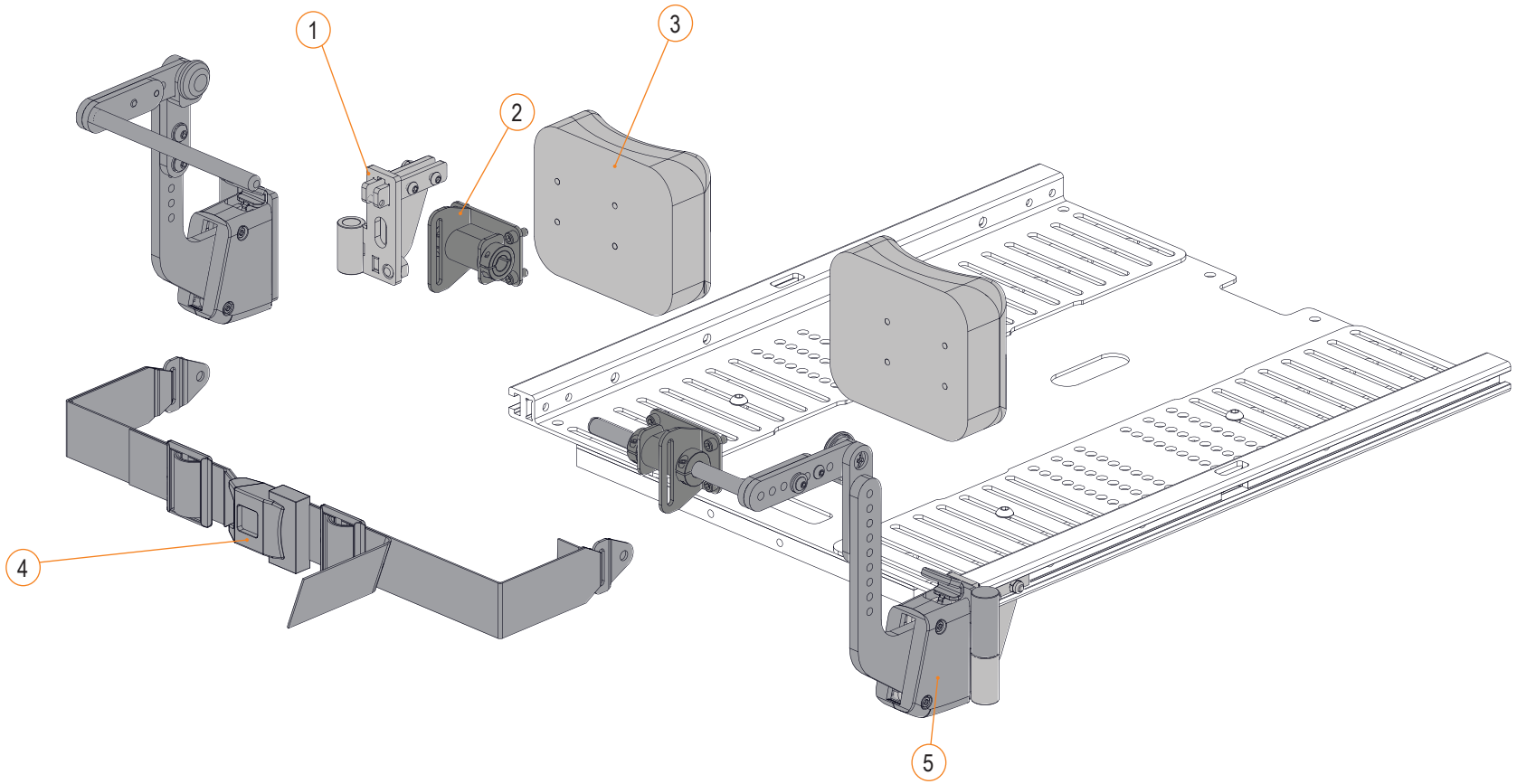

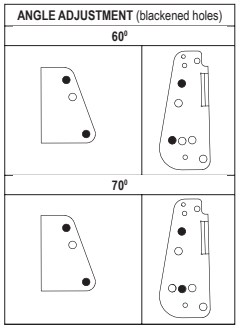

STUMP SUPPORT

ITEM #	PART #	DESCRIPTION	EFFECTIVE
1	**C-92173**	PROTECTION PAD HD FOOT REST	2011-08-19
8	**H00063**	PUSH HANDLE GRIP	2011-10-31
9A	**C-92210**	STD CALF PAD MOUNTING BRACKET	2014-01-16
9B	**C-92209**	HD CALF PAD MOUNTING BRACKET	2014-01-16
10A	**H00112**	CALF PAD, SMALL, 130 MM X 155 MM (5 IN X 6 IN)	2015-04-13
10B	**H00111**	CALF PAD, MEDIUM, 155 MM X 180 MM (6 IN X 7 IN)	2015-04-13
10C	**H00113**	CALF PAD, LARGE, 205 MM X 180 MM (8 IN X 7 IN)	2015-04-13
10D	**H00114**	CALF PAD, EXTRA LARGE, 155 MM X 180 MM (10 IN X 8 IN)	2015-04-13
1, 2 ,3A, 4, 5A, 6, 7	**1004000**	STUMP SUPPORT, LEFT	2022-01-01
1, 2 ,3B, 4, 5B, 6, 7	**1004001**	STUMP SUPPORT, RIGHT	2022-01-01

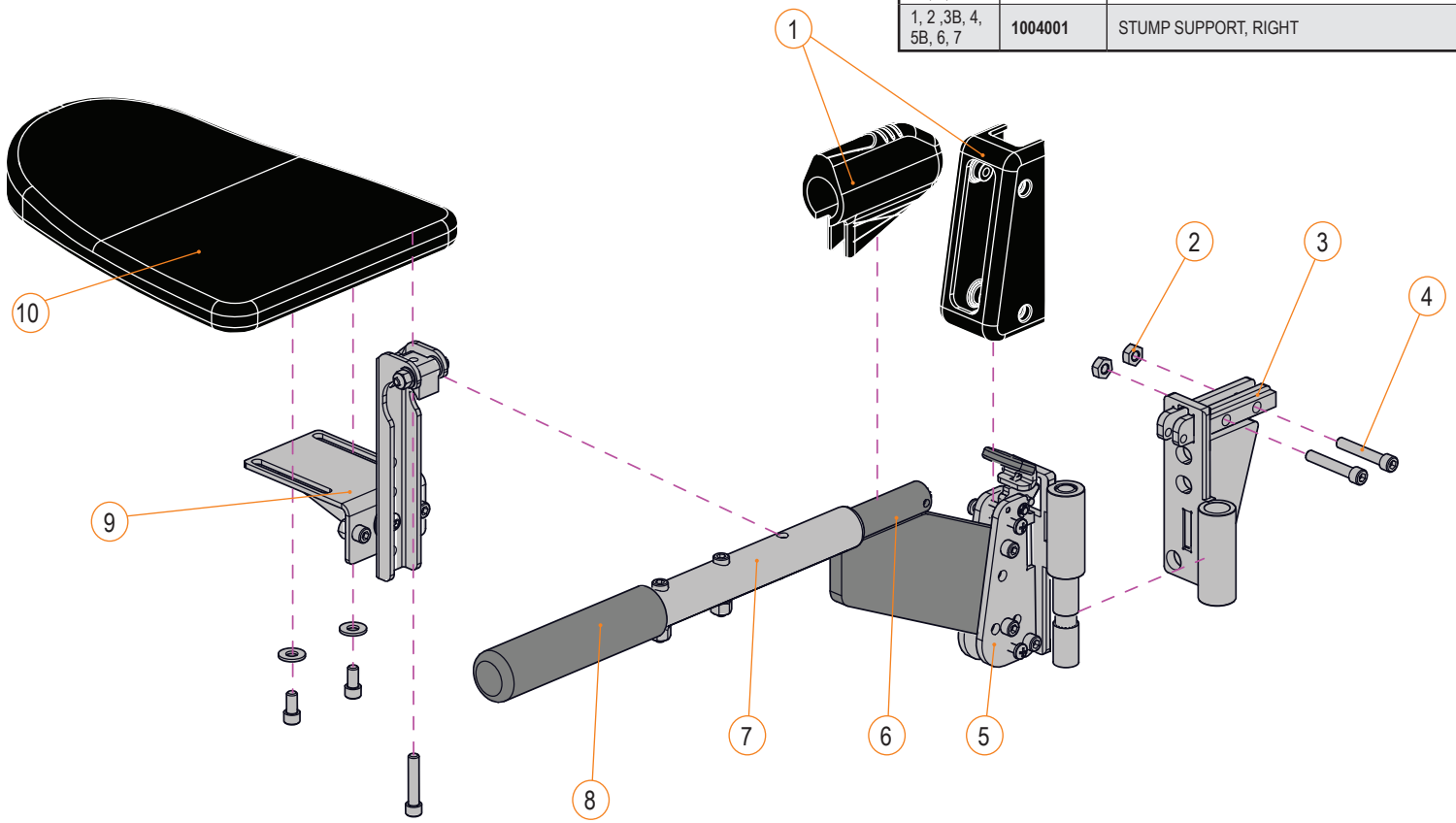

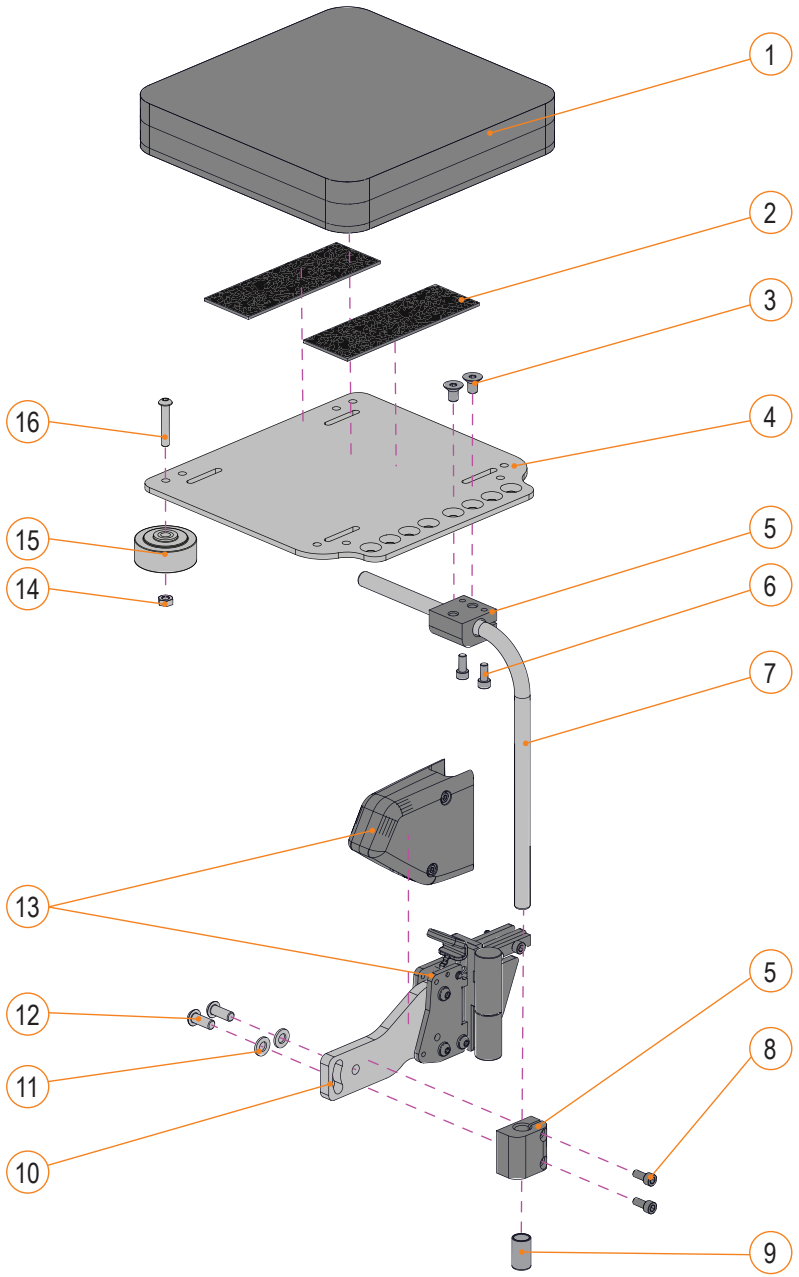

STUMP SUPPORT			
ITEM #	PART #	DESCRIPTION	EFFECTIVE
1A, 2	**1004627**	STUMP SUPPORT, CUSHION KIT 8x6	2024-03-01
1B, 2	**1004628**	STUMP SUPPORT, CUSHION KIT 10x8	2024-03-01
1C, 2	**1004629**	STUMP SUPPORT, CUSHION KIT 10x10	2024-03-01
3, 4A	**1004634**	STUMP SUPPORT PLATE KIT, 8x6	2024-03-01
3, 4B	**1004635**	STUMP SUPPORT PLATE KIT, 10x8	2024-03-01
3, 4C	**1004636**	STUMP SUPPORT PLATE KIT, 10x10	2024-03-01
5-12, 13A	**1004483**	ADJUSTABLE STUMP SUPPORT KIT, LEFT	2024-03-01
5-12, 13B	**1004637**	ADJUSTABLE STUMP SUPPORT KIT, RIGHT	2024-03-01
7	**1004481**	ADJUSTMENT ROD, STUMP SUPPORT	2024-03-01
14,15,16	**1003060**	KIT, WHEEL, FRONT FOOTPLATE BUMPER	2021-09-04

CONTOUR BACK CUSHION			
ITEM #	PART #	DESCRIPTION	EFFECTIVE
1A	**H1WWHH-2**	CONTOUR BACK COVER	2012-09-14
1A, 1B, 2	**1001923-WWHH**	CONTOUR BACK SUPPORT	2012-09-14
3,4,5A,6-11	**S-0027**	CONTOUR BACK MOUNTING HARDWARE, BELOW 21 IN WIDE	2012-09-07
3,4,5B,6-11	**S-0028**	CONTOUR BACK MOUNTING HARDWARE, 22 IN WIDE AND ABOVE	2012-09-07

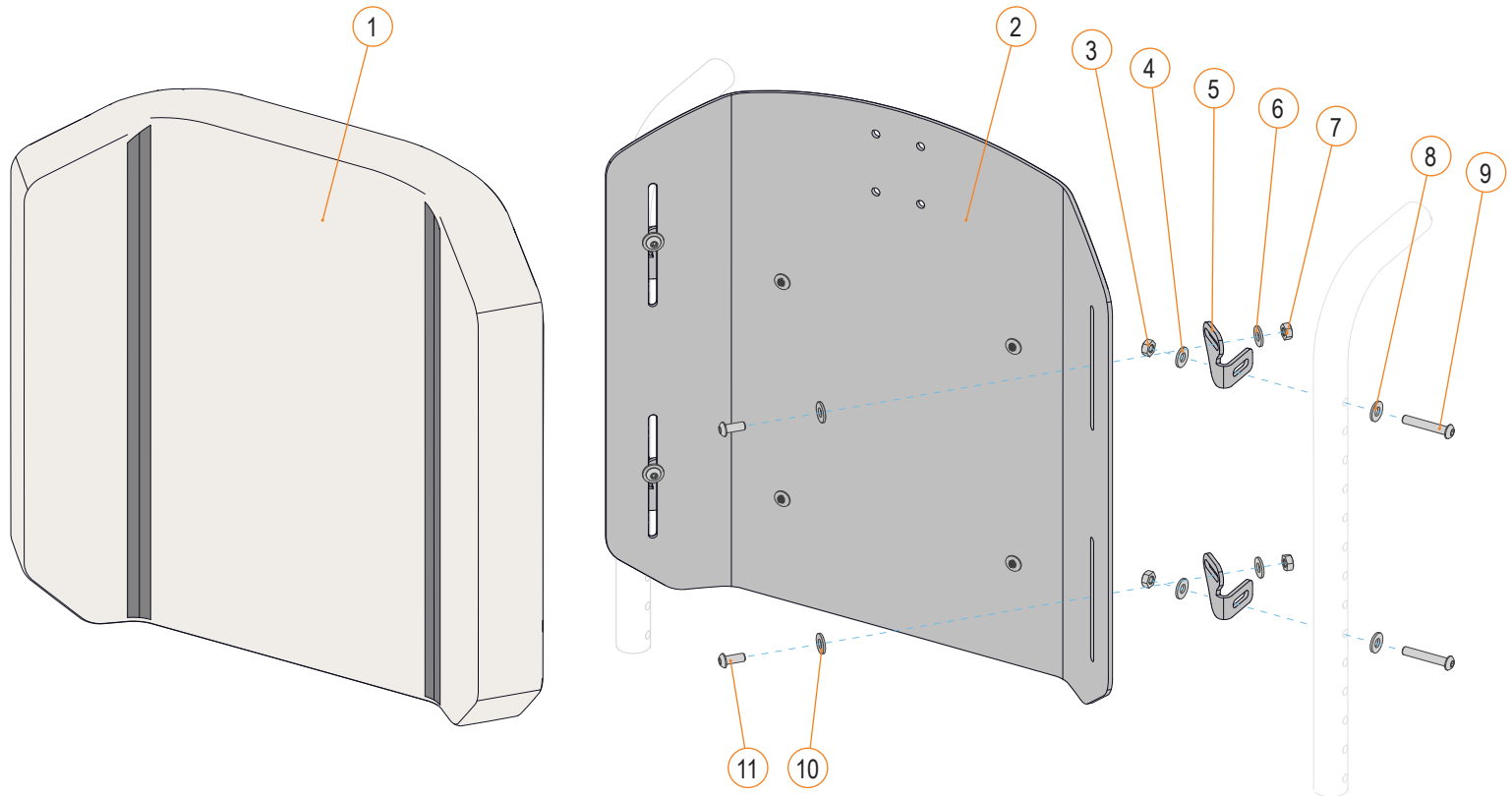

CUSHION CODIFICATIONS
WIDTH (W) / HEIGHT (H) (HEIGHTS ONLY AVAILABLE IN EVEN NUMBERS)
EXAMPLE: H11416-2 COVER WITH A WIDTH OF 14 IN. AND A HEIGHT OF 16 IN.

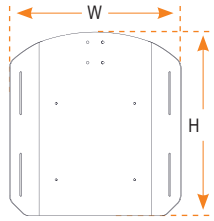

CONTOUR BACK CUSHION

ITEM #	PART #	DESCRIPTION	EFFECTIVE
1A	**1004193-WWHH**	CONTOUR BACK COVER	2023-05-01
1A, 1B, 2	**1001923-WWHH**	CONTOUR BACK SUPPORT	2023-05-01
3,4,5A,6-11	**S-0027**	CONTOUR BACK MOUNTING HARDWARE, BELOW 21 IN WIDE	2023-05-01
3,4,5B,6-11	**S-0028**	CONTOUR BACK MOUNTING HARDWARE, 22 IN WIDE AND ABOVE	2023-05-01

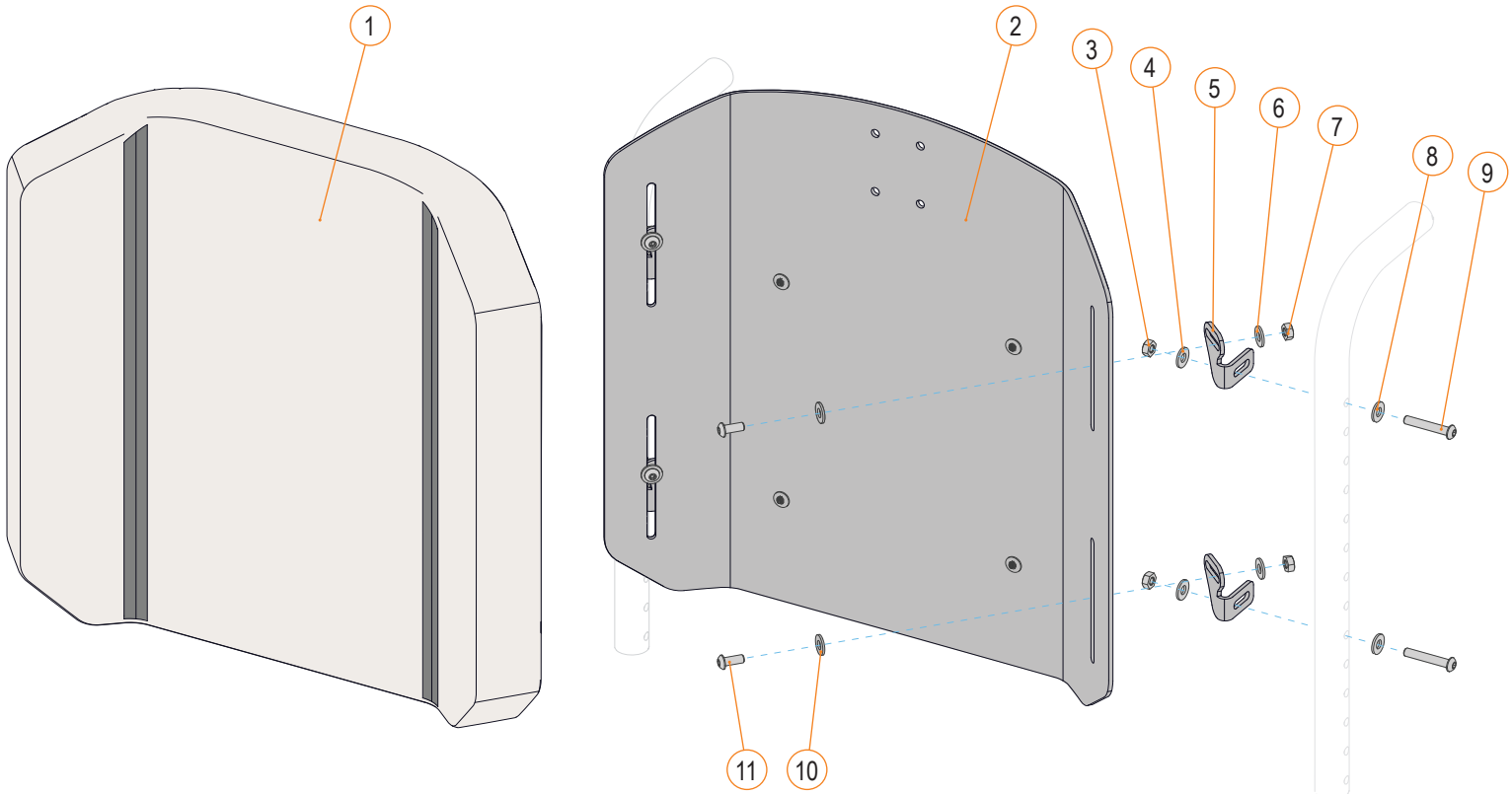

CUSHION CODIFICATIONS
WIDTH (W) / HEIGHT (H) (HEIGHTS ONLY AVAILABLE IN EVEN NUMBERS)
EXAMPLE: H11416-2 COVER WITH A WIDTH OF 14 IN. AND A HEIGHT OF 16 IN.

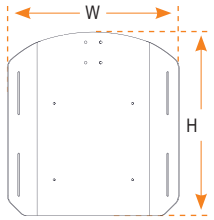

CONTOUR BACK CUSHION SIGNATURE

ITEM #	PART #	DESCRIPTION	EFFECTIVE
1A	**1004193-WWHH**	CONTOUR BACK COVER	2025-06-26
1A, 1B, 2	**1001923-WWHH**	CONTOUR BACK SUPPORT	2025-06-26
3-4,5A,6-10	**1005387**	CONTOUR BACK MOUNTING HARDWARE, BELOW 21 IN WIDE	2025-06-26
3-4,5B,8-10	**1005388**	CONTOUR BACK MOUNTING HARDWARE, 22 IN WIDE AND ABOVE	2025-06-26

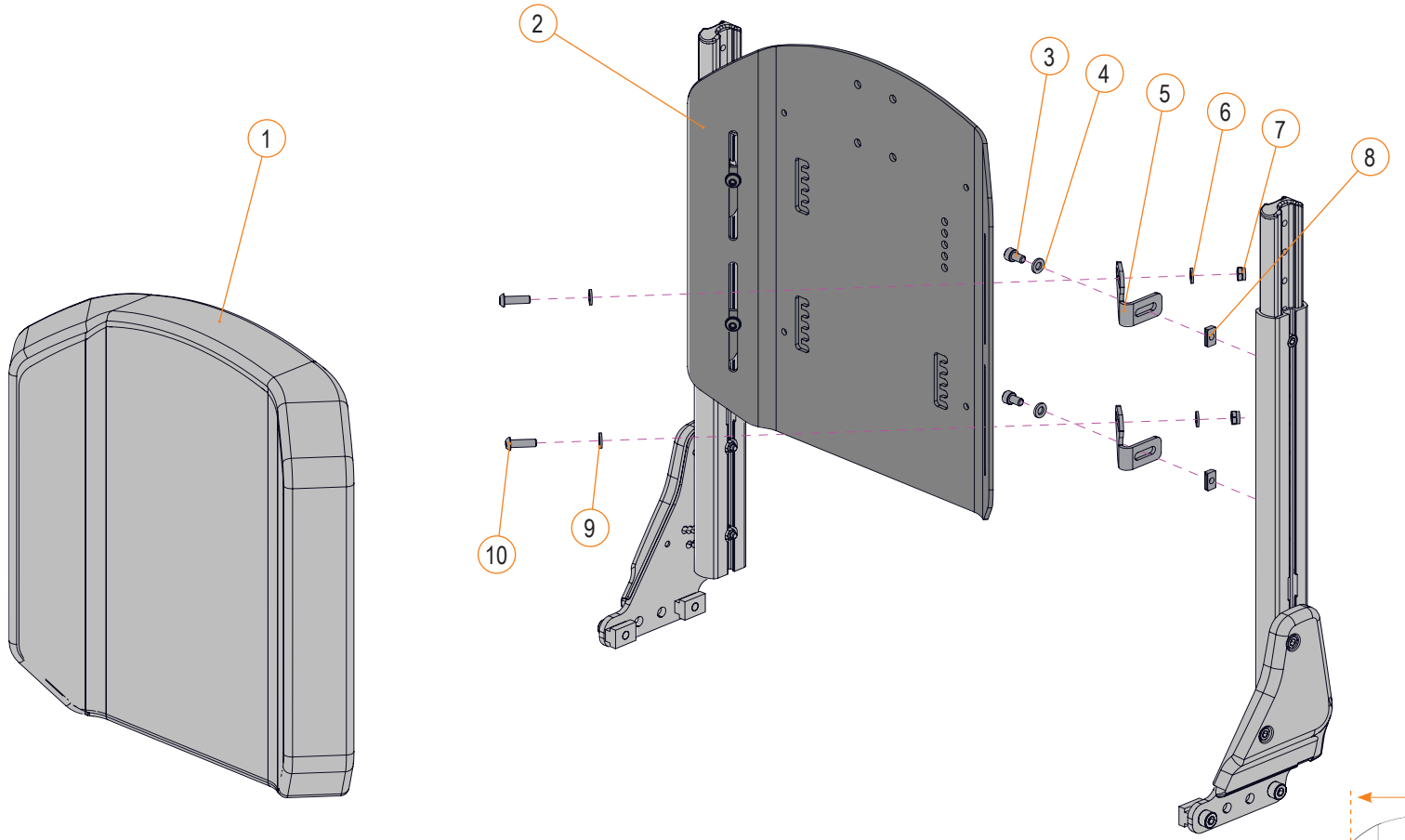

CUSHION CODIFICATIONS
WIDTH (W) / HEIGHT (H) (HEIGHTS ONLY AVAILABLE IN EVEN NUMBERS)
EXAMPLE: H11416-2 COVER WITH A WIDTH OF 14 IN. AND A HEIGHT OF 16 IN.

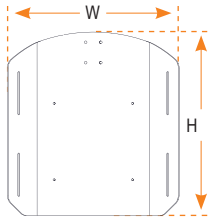

CONTOUR CUSHION FIXED BACK SIGNATURE			
ITEM #	PART #	DESCRIPTION	EFFECTIVE
1A	**1004193-WWHH**	CONTOUR BACK COVER	2025-06-26
1A, 1B, 2	**1001923-WWHH**	CONTOUR BACK SUPPORT	2025-06-26
3-4	**1005625**	MOUNTING HDW FOR CONTOUR BACK, STS RECLINING BACK	2025-06-26

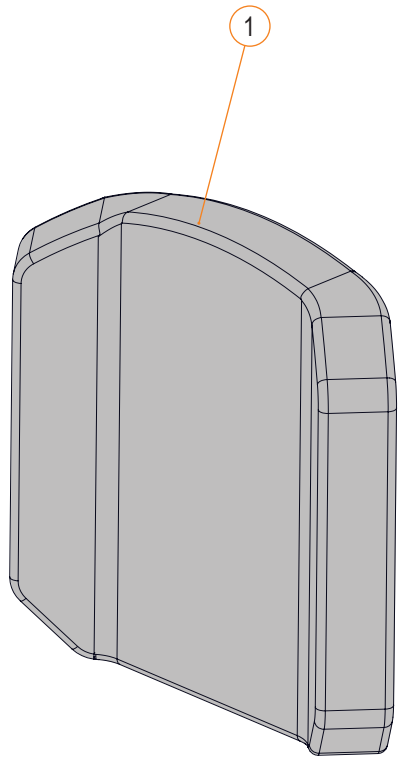

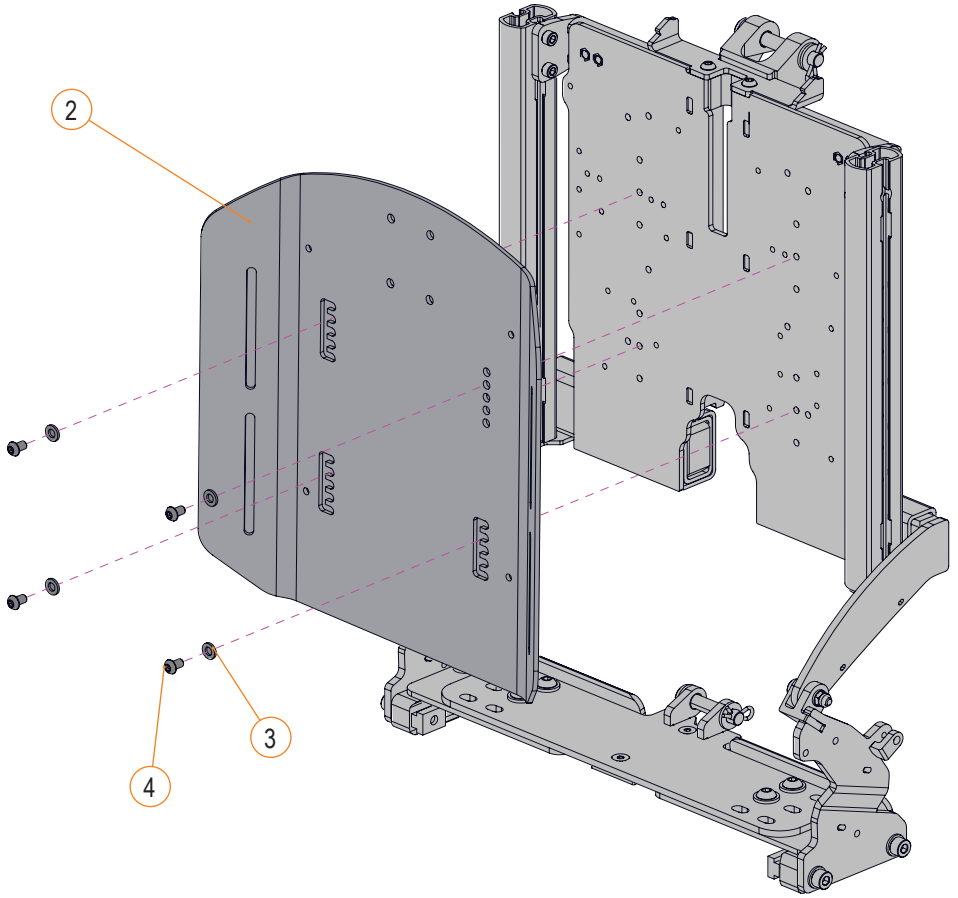

CUSHION CODIFICATIONS
WIDTH (W) / HEIGHT (H) (HEIGHTS ONLY AVAILABLE IN EVEN NUMBERS)
EXAMPLE: H11416-2 COVER WITH A WIDTH OF 14 IN. AND A HEIGHT OF 16 IN.

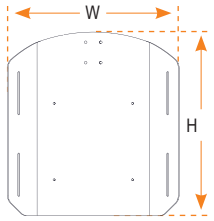



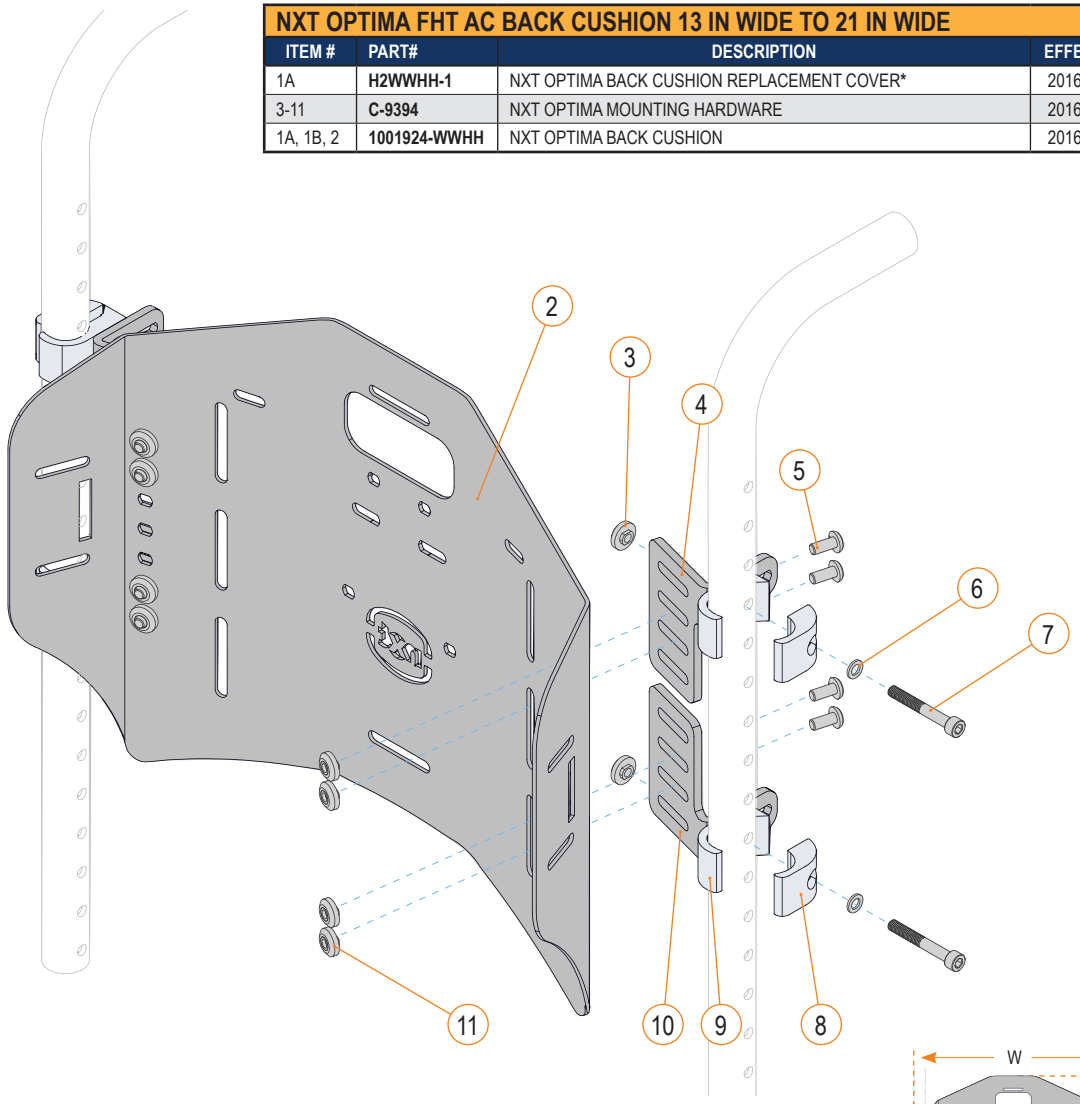

NXT OPTIMA FHT AC BACK CUSHION 13 IN WIDE TO 21 IN WIDE			
ITEM #	PART#	DESCRIPTION	EFFECTIVE
1A	**H2WWHH-1**	NXT OPTIMA BACK CUSHION REPLACEMENT COVER*	2016-11-09
3-11	**C-9394**	NXT OPTIMA MOUNTING HARDWARE	2016-11-09
1A, 1B, 2	**1001924-WWHH**	NXT OPTIMA BACK CUSHION	2016-11-09

CUSHION CODIFICATIONS
WIDTH (W) / HEIGHT (H) (BACK HEIGHTS ARE AVAILABLE IN 13 IN., 16 IN. AND 19 IN. ONLY)
EXAMPLE: H21816-1 CUSHION WITH A WIDTH OF 18 IN. AND A HEIGHT OF 16 IN.

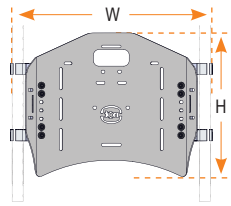

*NOT AVAILABLE FOR BACKS ORDERED PRIOR TO JULY 31ST 2021.



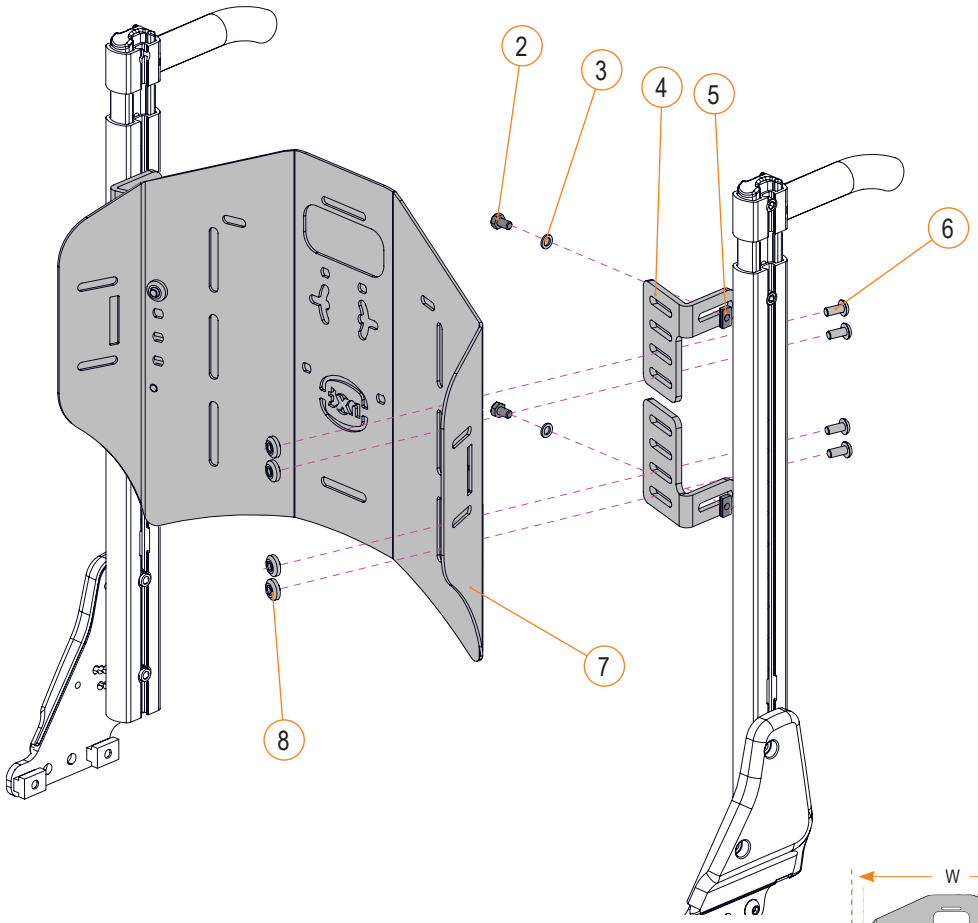

NXT OPTIMA FHT AC BACK CUSHION 13 IN WIDE TO 21 IN WIDE SIGNATURE			
ITEM #	PART#	DESCRIPTION	EFFECTIVE
1A	**H2WWHH-1**	NXT OPTIMA BACK CUSHION REPLACEMENT COVER*	2025-06-26
1A,1B, 6, 7, 8	**1001924-WWHH**	NXT OPTIMA BACK CUSHION	2025-06-26
2-5	**1005626**	NXT BACKPLATE INSTALLATION KIT	2025-06-26

CUSHION CODIFICATIONS
WIDTH (W) / HEIGHT (H) (BACK HEIGHTS ARE AVAILABLE IN 13 IN., 16 IN. AND 19 IN. ONLY)
EXAMPLE: H21816-1 CUSHION WITH A WIDTH OF 18 IN. AND A HEIGHT OF 16 IN.

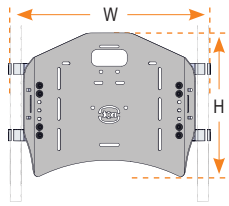

*NOT AVAILABLE FOR BACKS ORDERED PRIOR TO JULY 31ST 2021.

NXT OPTIMA FHT AC BACK CUSHION 22 IN WIDE TO 28 IN WIDE

ITEM #	PART#	DESCRIPTION	EFFECTIVE
1A	**H2WWHH-1**	NXT OPTIMA BACK CUSHION REPLACEMENT COVER*	2016-11-09
4-12	**C-9394**	NXT OPTIMA MOUNTING HARDWARE	2016-11-09
1A, 1B, 2, 3, 13	**1001924-WWHH**	NXT OPTIMA BACK CUSHION	2016-11-09

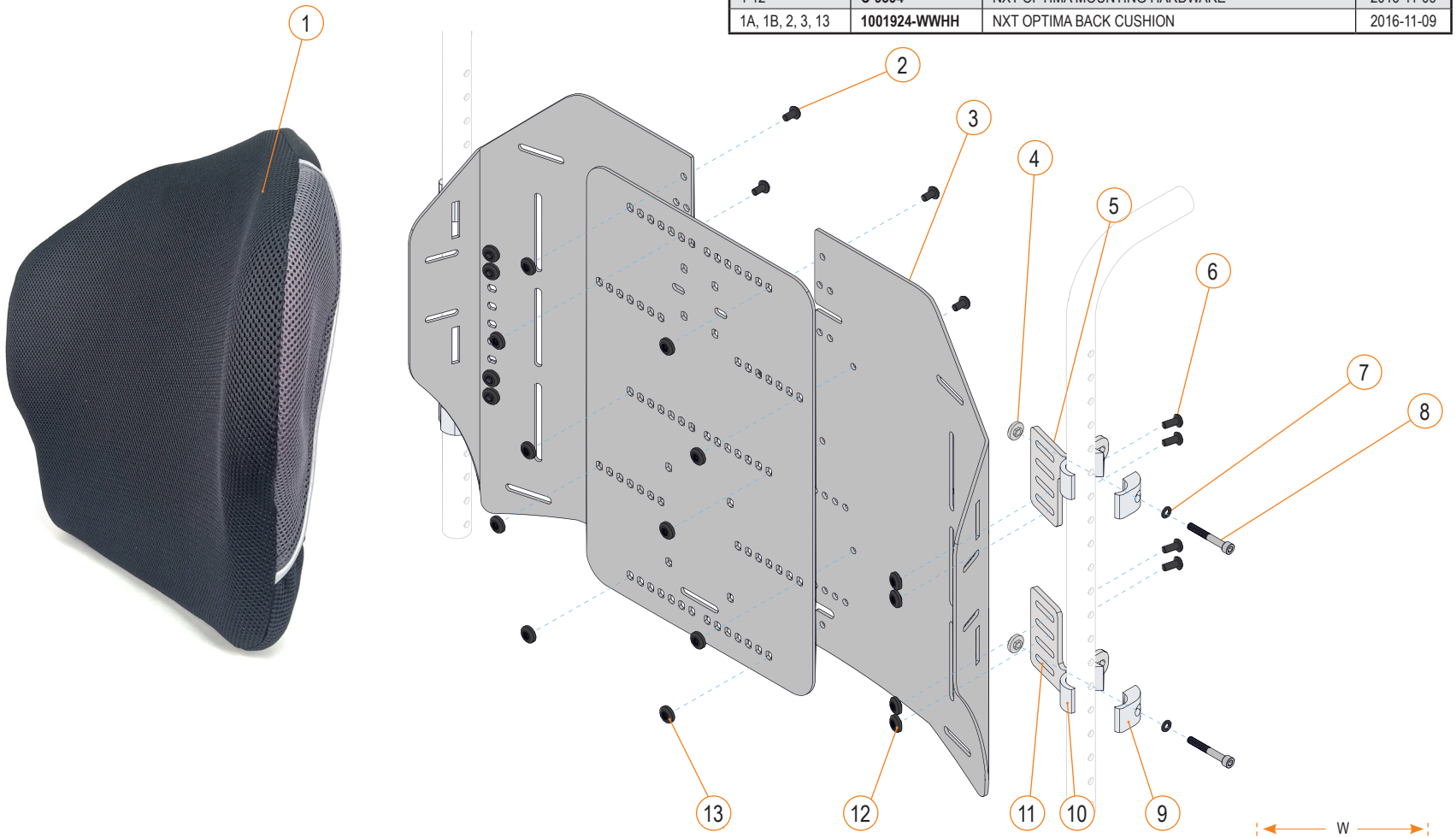

CUSHION CODIFICATIONS
WIDTH (W) / HEIGHT (H) (BACK HEIGHTS ARE AVAILABLE IN 13 IN., 16 IN. AND 19 IN. ONLY)
EXAMPLE: H22216-1 CUSHION WITH A WIDTH OF 22 IN. AND A HEIGHT OF 16 IN.

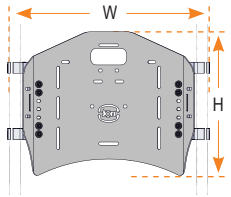

*NOT AVAILABLE FOR BACKS ORDERED PRIOR TO JULY 31ST 2021.



NXT OPTIMA FHT AC BACK CUSHION 22 IN WIDE TO 28 IN WIDE SIGNATURE			
ITEM #	PART#	DESCRIPTION	EFFECTIVE
1A	**H2WWHH-1**	NXT OPTIMA BACK CUSHION REPLACEMENT COVER*	2025-06-26
1A,1B, 2-7	**1001924-WWHH**	NXT OPTIMA BACK CUSHION	2025-06-26
8-11	**1005626**	NXT BACKPLATE INSTALLATION KIT	2025-06-26

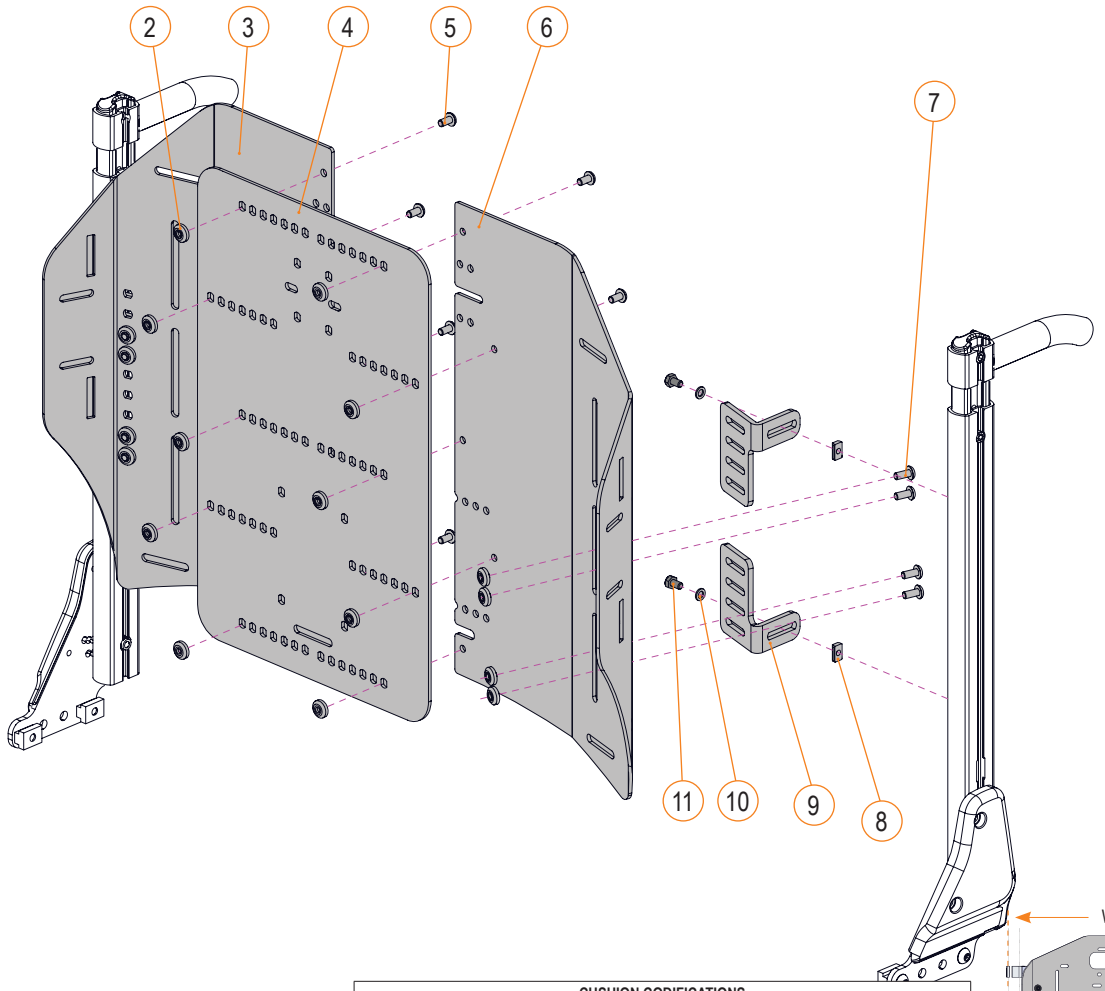

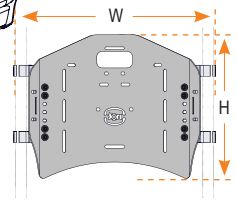

CUSHION CODIFICATIONS
WIDTH (W) / HEIGHT (H) (BACK HEIGHTS ARE AVAILABLE IN 13 IN., 16 IN. AND 19 IN. ONLY)
EXAMPLE: H22216-1 CUSHION WITH A WIDTH OF 22 IN. AND A HEIGHT OF 16 IN.

*NOT AVAILABLE FOR BACKS ORDERED PRIOR TO JULY 31ST 2021.

NXT OPTIMA DEEP BACK CUSHION 13 IN WIDE TO 21 IN WIDE

ITEM #	PART#	DESCRIPTION	EFFECTIVE
1A	**H4WWHH-1**	NXT OPTIMA DEEP PCB BACK CUSHION REPLACEMENT COVER*	2016-11-09
3-10	**C-9394**	NXT OPTIMA DEEP PCB MOUNTING HARDWARE	2016-11-09
1A, 1B, 2	**1001925-WWHH**	NXT OPTIMA DEEP PCB BACK CUSHION	2016-11-09

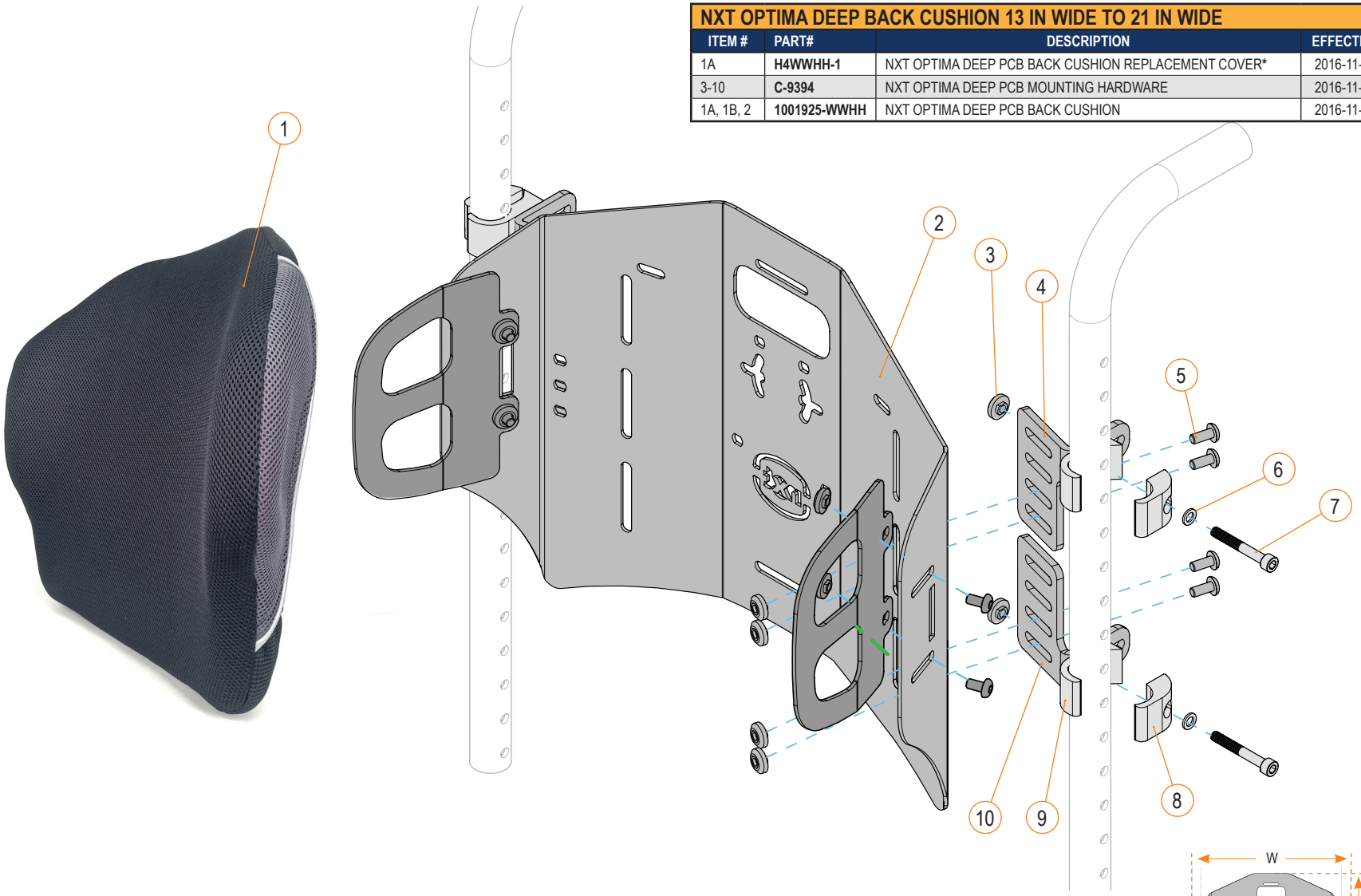

CUSHION CODIFICATIONS
WIDTH (W) / HEIGHT (H) (BACK HEIGHTS ARE AVAILABLE IN 13 IN., 16 IN. AND 19 IN. ONLY)
EXAMPLE: H41316-1 CUSHION WITH A WIDTH OF 13 IN. AND A HEIGHT OF 16 IN.

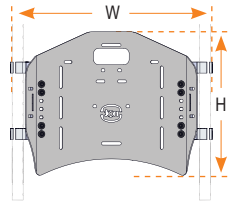

*NOT AVAILABLE FOR BACKS ORDERED PRIOR TO JULY 31ST 2021.

NXT OPTIMA DEEP BACK CUSHION 13 IN WIDE TO 21 IN WIDE SIGNATURE

ITEM #	PART#	DESCRIPTION	EFFECTIVE
1A	**H2WWHH-1**	NXT OPTIMA DEEP PCB BACK CUSHION REPLACEMENT COVER*	2025-06-26
1A,1B,2, 3, 6, 10	**1001925-WWHH**	NXT OPTIMA DEEP PCB BACK CUSHION	2025-06-26
4, 5, 8, 7	**1005626**	NXT BACKPLATE INSTALLATION KIT	2025-06-26



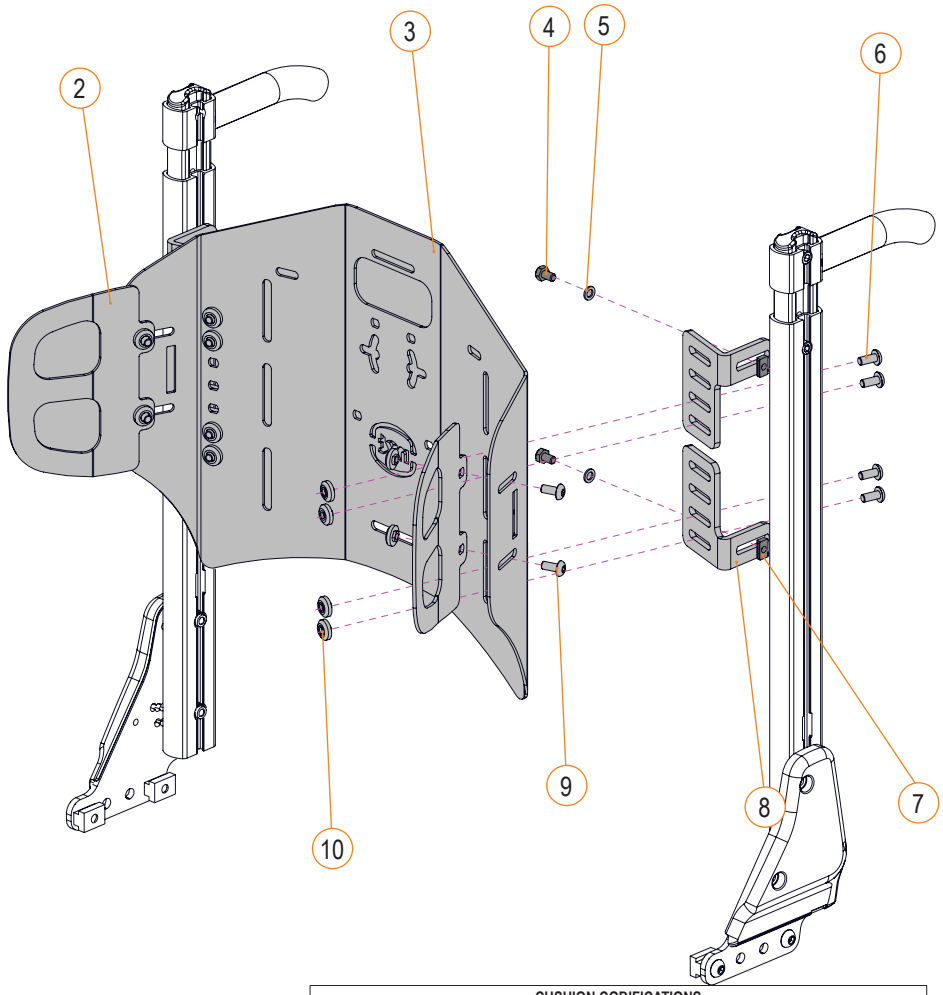

CUSHION CODIFICATIONS
WIDTH (W) / HEIGHT (H) (BACK HEIGHTS ARE AVAILABLE IN 13 IN., 16 IN. AND 19 IN. ONLY)
EXAMPLE: H41316-1 CUSHION WITH A WIDTH OF 13 IN. AND A HEIGHT OF 16 IN.

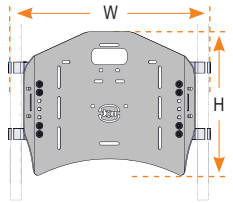

*NOT AVAILABLE FOR BACKS ORDERED PRIOR TO JULY 31ST 2021.

NXT OPTIMA FHT AC BACK CUSHION 22 IN WIDE TO 28 IN WIDE

ITEM #	PART#	DESCRIPTION	EFFECTIVE
1A	**H4WWHH-1**	NXT OPTIMA DEEP PCB BACK CUSHION REPLACEMENT COVER*	2016-11-09
4-12	**C-9394**	NXT OPTIMA DEEP PCB MOUNTING HARDWARE	2016-11-09
1A, 1B, 2, 3, 13	**1001925-WWHH**	NXT OPTIMA DEEP PCB BACK CUSHION	2016-11-09

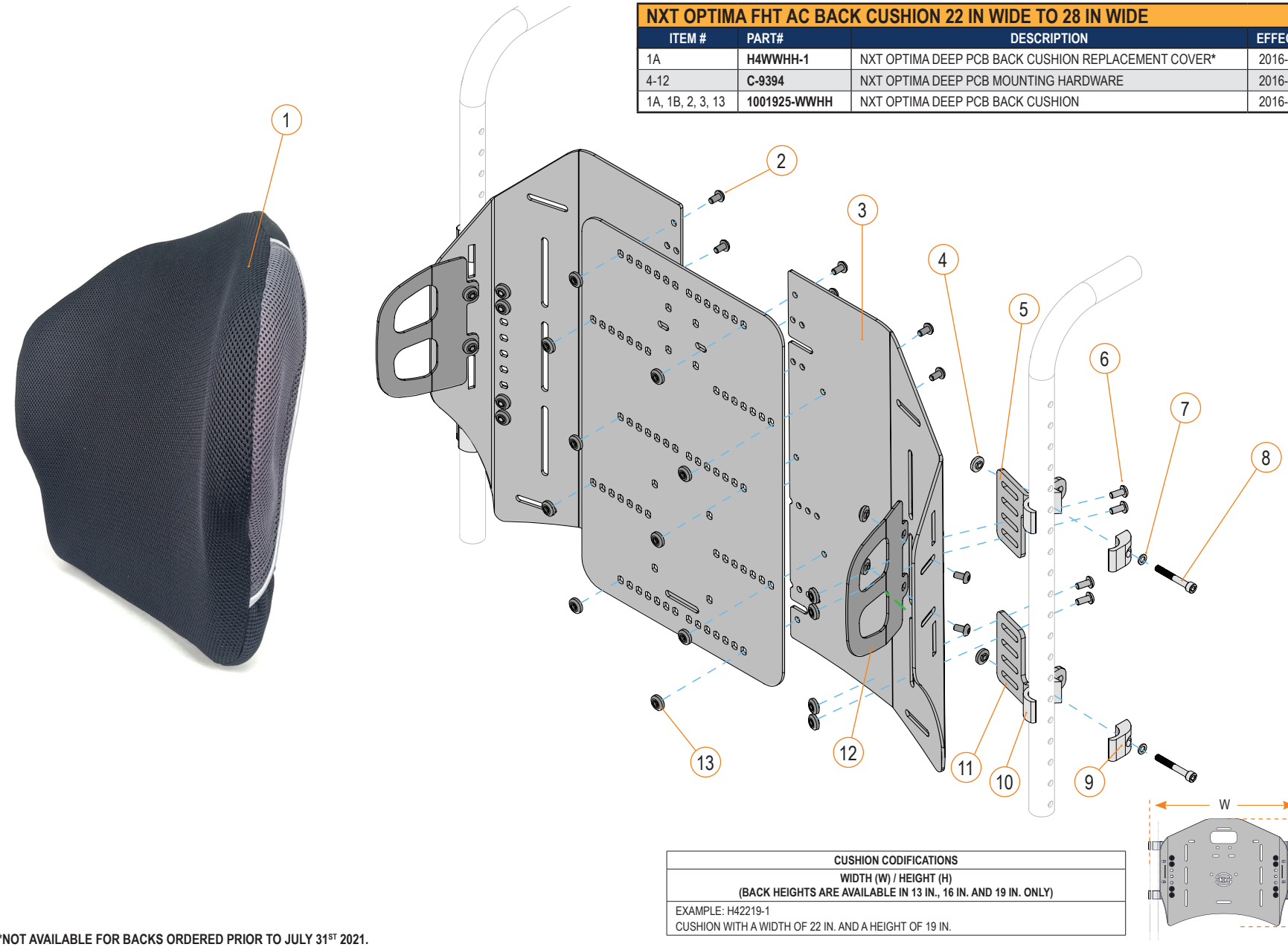

CUSHION CODIFICATIONS
WIDTH (W) / HEIGHT (H) (BACK HEIGHTS ARE AVAILABLE IN 13 IN., 16 IN. AND 19 IN. ONLY)
EXAMPLE: H42219-1 CUSHION WITH A WIDTH OF 22 IN. AND A HEIGHT OF 19 IN.

*NOT AVAILABLE FOR BACKS ORDERED PRIOR TO JULY 31ST 2021.

NXT OPTIMA FHT AC BACK CUSHION 22 IN WIDE TO 28 IN WIDE SIGNATURE

ITEM #	PART#	DESCRIPTION	EFFECTIVE
1A	**H2WWHH-1**	NXT OPTIMA DEEP PCB BACK CUSHION REPLACEMENT COVER*	2025-06-26
1A,1B,2-6, 12	**1001925-WWHH**	NXT OPTIMA DEEP PCB BACK CUSHION	2025-06-26
7-11	**1005626**	NXT BACKPLATE INSTALLATION KIT	2025-06-26



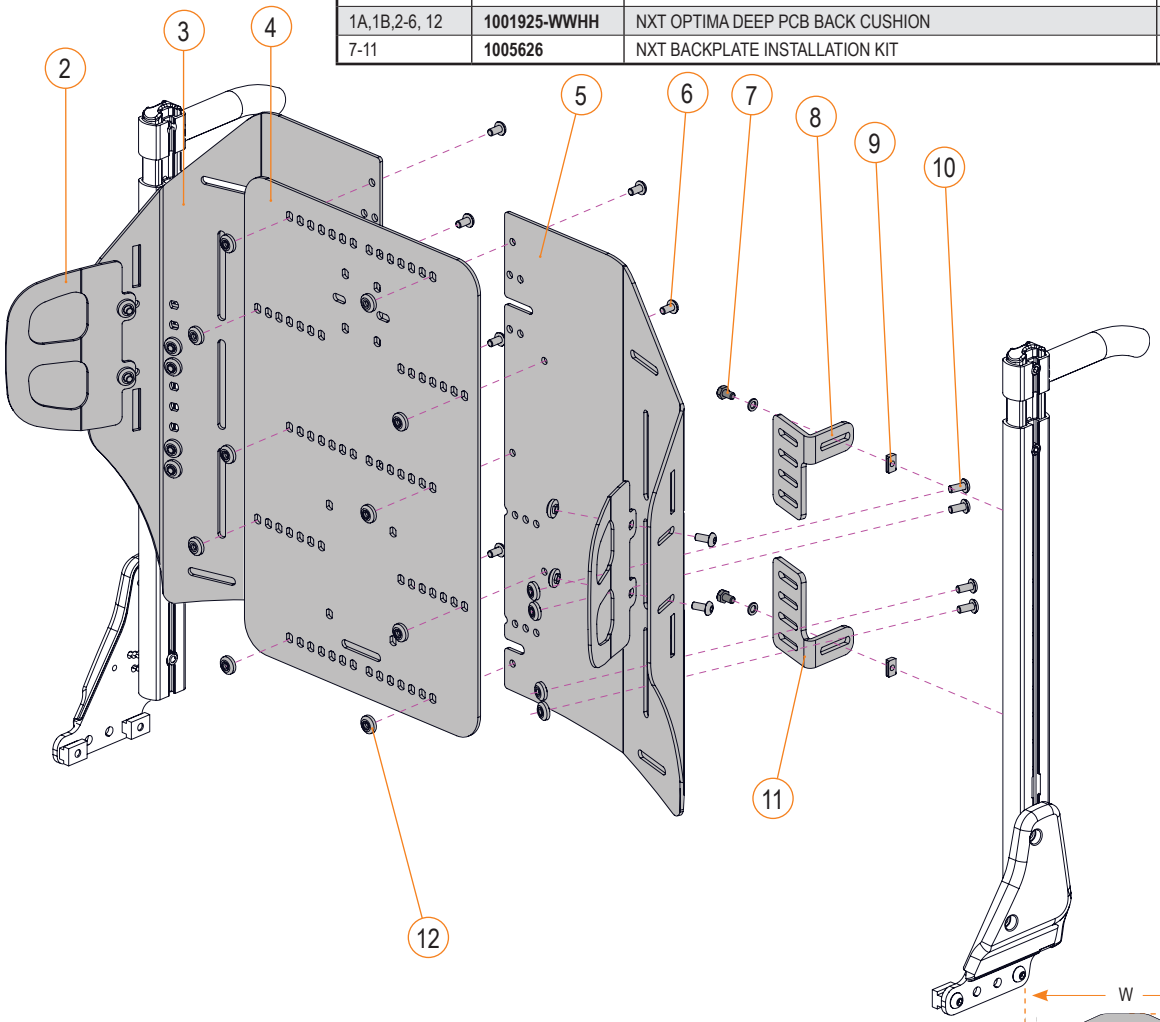

CUSHION CODIFICATIONS
WIDTH (W) / HEIGHT (H) (BACK HEIGHTS ARE AVAILABLE IN 13 IN., 16 IN. AND 19 IN. ONLY)
EXAMPLE: H42219-1 CUSHION WITH A WIDTH OF 22 IN. AND A HEIGHT OF 19 IN.

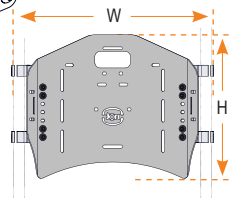

*NOT AVAILABLE FOR BACKS ORDERED PRIOR TO JULY 31ST 2021.

ADJUSTABLE TENSION BACKREST			
ITEM #	PART #	DESCRIPTION	EFFECTIVE
1-3	**1003085**	KIT, HARDWARE, ADJUSTABLE TENSION BACKREST	2021-05-07
4A	**1003072-WWHH-20/-**	FLEXIBLE BACK WITH ADJUSTABLE TENSION WWXHH	2021-05-07
4B	**1003072-WWHH-21/+**	FLEXIBLE BACK WITH ADJUSTABLE TENSION WWXHH	2021-05-07







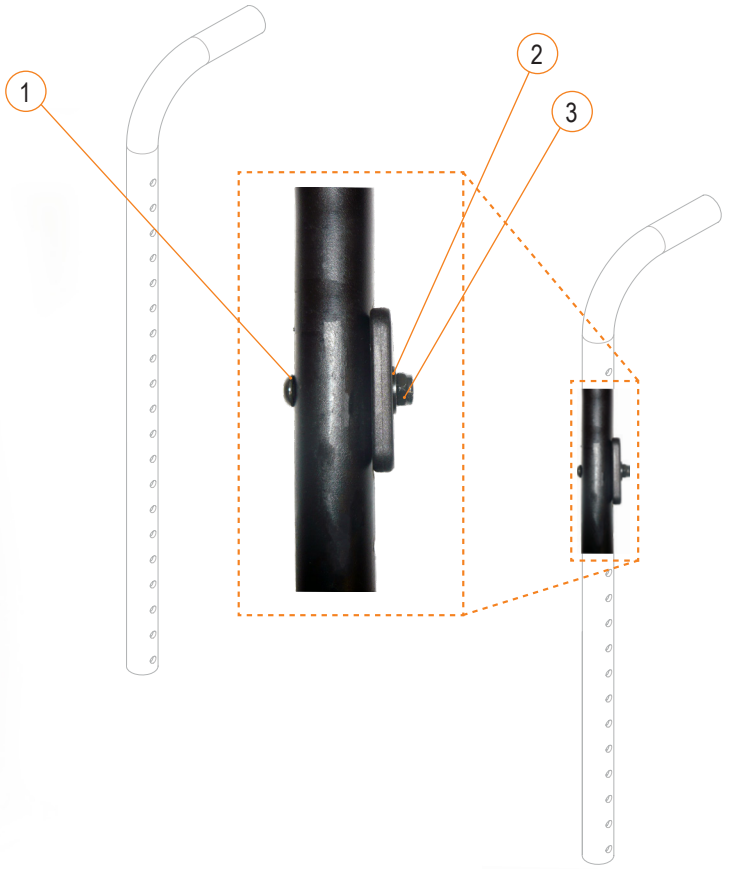



CUSHION CODIFICATIONS
1003072 / WIDTH (W) / HEIGHT (H)
EXAMPLE: 1003072-1818-21/- COVER WITH A WIDTH OF 18 IN. AND A HEIGHT OF 18 IN.







ADJUSTABLE TENSION BACKREST SIGNATURE			
ITEM #	PART #	DESCRIPTION	EFFECTIVE
1-3	**1005909**	KIT, SIGNATURE HARDWARE, ADJUSTABLE TENSION BRACKR	2025-06-26
4A	**1003072-WWHH-20/-**	FLEXIBLE BACK WITH ADJUSTABLE TENSION WWXHH	2025-06-26
4B	**1003072-WWHH-21/+**	FLEXIBLE BACK WITH ADJUSTABLE TENSION WWXHH	2025-06-26

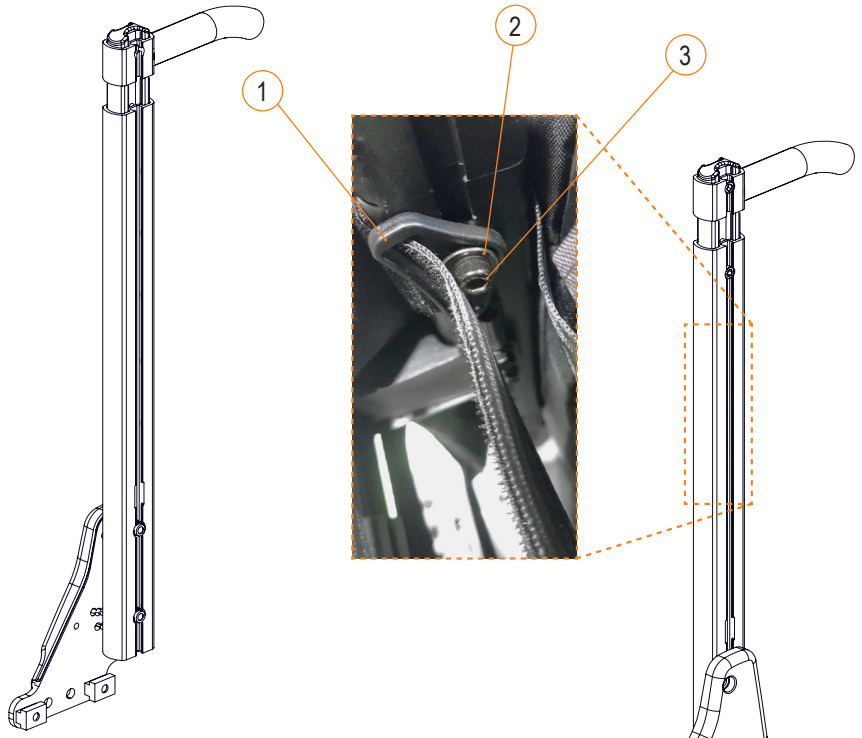



CUSHION CODIFICATIONS
1003072 / WIDTH (W) / HEIGHT (H)
EXAMPLE: 1003072-1818-21/- COVER WITH A WIDTH OF 18 IN. AND A HEIGHT OF 18 IN.

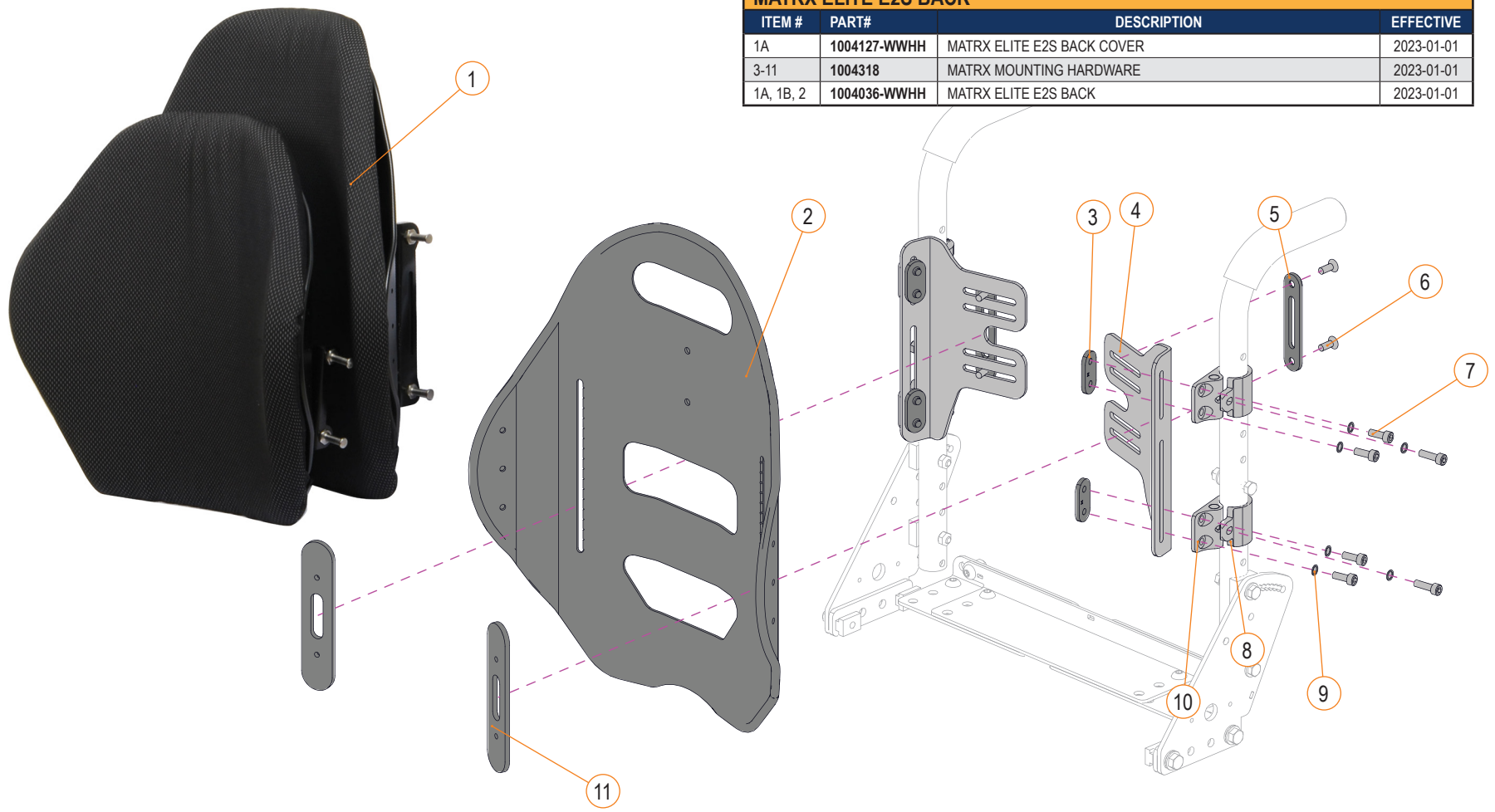

MATRX ELITE E2S BACK			
ITEM #	PART#	DESCRIPTION	EFFECTIVE
1A	**1004127-WWHH**	MATRX ELITE E2S BACK COVER	2023-01-01
3-11	**1004318**	MATRX MOUNTING HARDWARE	2023-01-01
1A, 1B, 2	**1004036-WWHH**	MATRX ELITE E2S BACK	2023-01-01

CUSHION CODIFICATIONS
WIDTH (W) / HEIGHT (H) (BACK HEIGHTS ARE AVAILABLE IN 06, 08, 10, 12, 14, 16, 18 AND 20 INCHES ONLY)
EXAMPLE: 1004127-1616, 1004036-1616 CUSHION WITH A WIDTH OF 16 IN. AND A HEIGHT OF 16 IN.

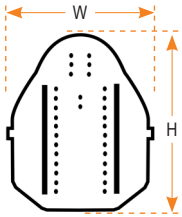



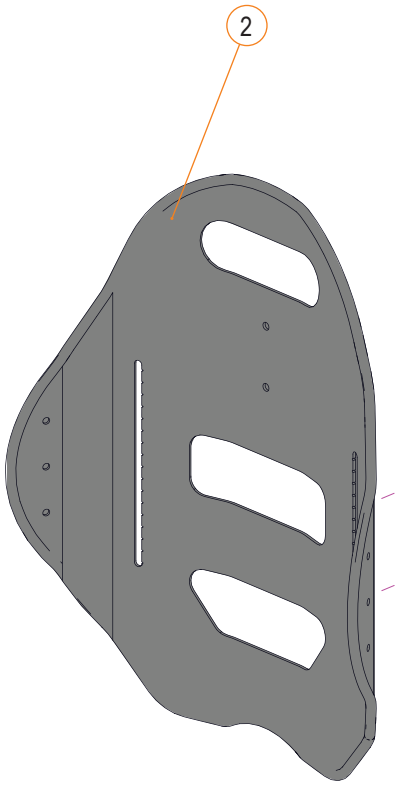

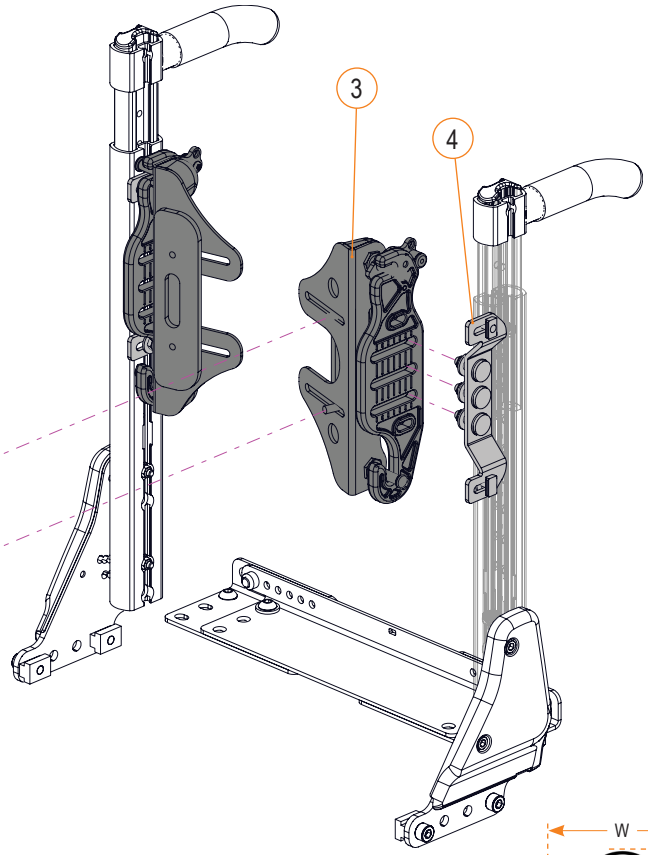

MATRX ELITE E2S SIGNATURE

ITEM #	PART#	DESCRIPTION	EFFECTIVE
1A	**1004127-WWHH**	MATRX ELITE E2S BACK COVER	2023-01-01
3	**1005635**	MATRX EASYSET MOUNTING HARDWARE	2025-06-26
4A	**1005645**	MATRX INTERFACE DEEP MOUNTING BRACKET, FIXED	2025-06-26
4B	**1005646**	MATRX INTERFACE SHALLOW MOUNTING BKT, RECLINE	2025-06-26
1A, 1B, 2, 3	**1005684-WWHH**	MATRX ELITE E2S BACK - COMPLETE [E2615]	2025-06-26

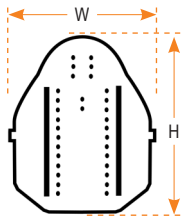

CUSHION CODIFICATIONS
WIDTH (W) / HEIGHT (H) (BACK HEIGHTS ARE AVAILABLE IN 06, 08, 10, 12, 14, 16, 18 AND 20 INCHES ONLY)
EXAMPLE: 1004127-1616, 1004036-1616 CUSHION WITH A WIDTH OF 16 IN. AND A HEIGHT OF 16 IN.

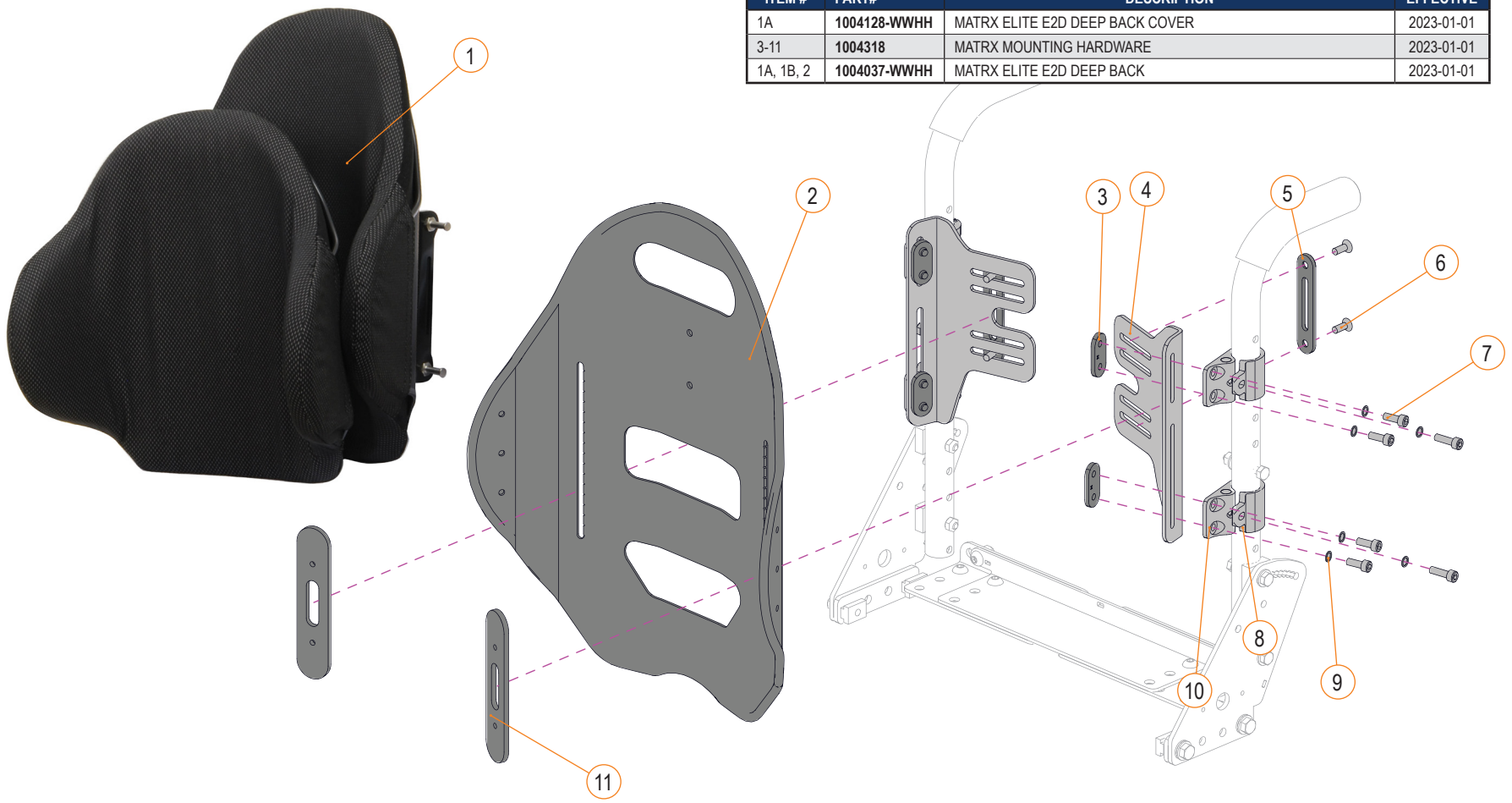

MATRX ELITE E2D DEEP BACK			
ITEM #	PART#	DESCRIPTION	EFFECTIVE
1A	**1004128-WWHH**	MATRX ELITE E2D DEEP BACK COVER	2023-01-01
3-11	**1004318**	MATRX MOUNTING HARDWARE	2023-01-01
1A, 1B, 2	**1004037-WWHH**	MATRX ELITE E2D DEEP BACK	2023-01-01

CUSHION CODIFICATIONS
WIDTH (W) / HEIGHT (H) (BACK HEIGHTS ARE AVAILABLE IN 06, 08, 10, 12, 14, 16, 18 AND 20 INCHES ONLY)
EXAMPLE: 1004128-1616, 1004037-1616 CUSHION WITH A WIDTH OF 16 IN. AND A HEIGHT OF 16 IN.

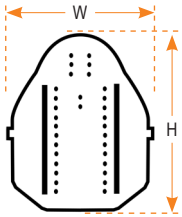



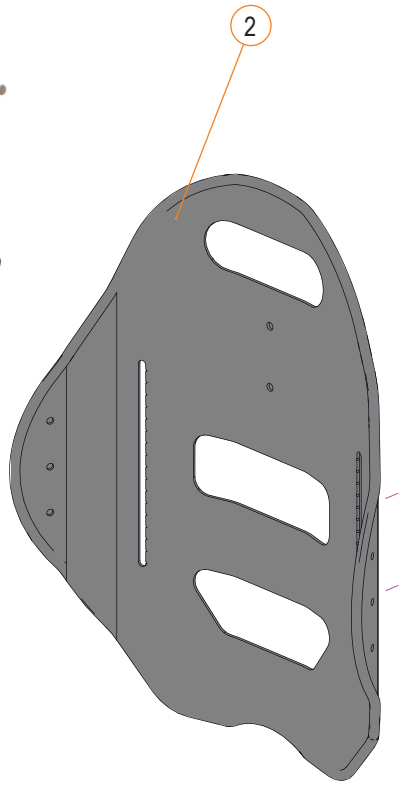

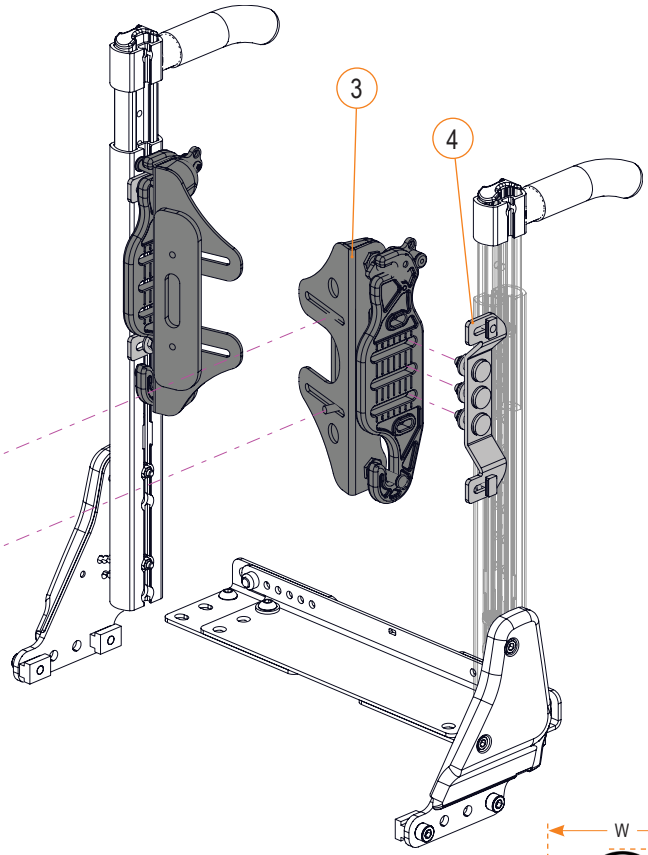

MATRX ELITE E2D DEEP BACK SIGNATURE			
ITEM #	PART#	DESCRIPTION	EFFECTIVE
1A	**1004128-WWHH**	MATRX ELITE E2D DEEP BACK COVER	2023-01-01
3	**1005635**	MATRX EASYSET MOUNTING HARDWARE	2025-06-26
4A	**1005645**	MATRX INTERFACE DEEP MOUNTING BRACKET, FIXED	2025-06-26
4B	**1005646**	MATRX INTERFACE SHALLOW MOUNTING BKT, RECLINE	2025-06-26
1A, 1B, 2, 3	**1005683-WWHH**	MATRX ELITE E2S BACK - COMPLETE [E2615]	2025-06-26

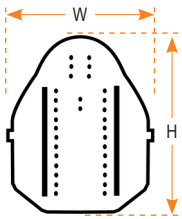

CUSHION CODIFICATIONS
WIDTH (W) / HEIGHT (H) (BACK HEIGHTS ARE AVAILABLE IN 06, 08, 10, 12, 14, 16, 18 AND 20 INCHES ONLY)
EXAMPLE: 1004128-1616, 1004037-1616 CUSHION WITH A WIDTH OF 16 IN. AND A HEIGHT OF 16 IN.

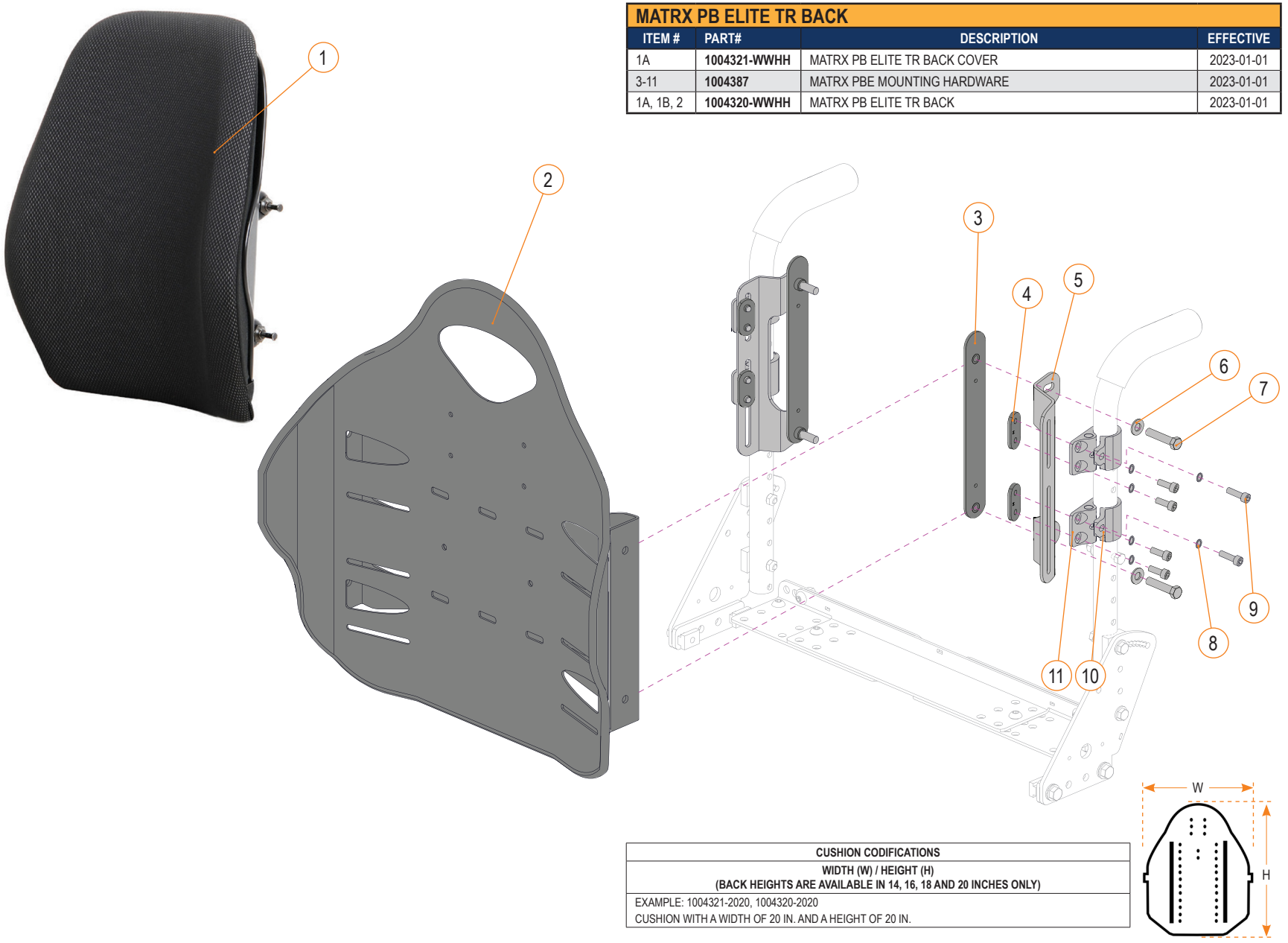

MATRX PB ELITE TR BACK			
ITEM #	PART#	DESCRIPTION	EFFECTIVE
1A	**1004321-WWHH**	MATRX PB ELITE TR BACK COVER	2023-01-01
3-11	**1004387**	MATRX PBE MOUNTING HARDWARE	2023-01-01
1A, 1B, 2	**1004320-WWHH**	MATRX PB ELITE TR BACK	2023-01-01

CUSHION CODIFICATIONS
WIDTH (W) / HEIGHT (H) (BACK HEIGHTS ARE AVAILABLE IN 14, 16, 18 AND 20 INCHES ONLY)
EXAMPLE: 1004321-2020, 1004320-2020 CUSHION WITH A WIDTH OF 20 IN. AND A HEIGHT OF 20 IN.



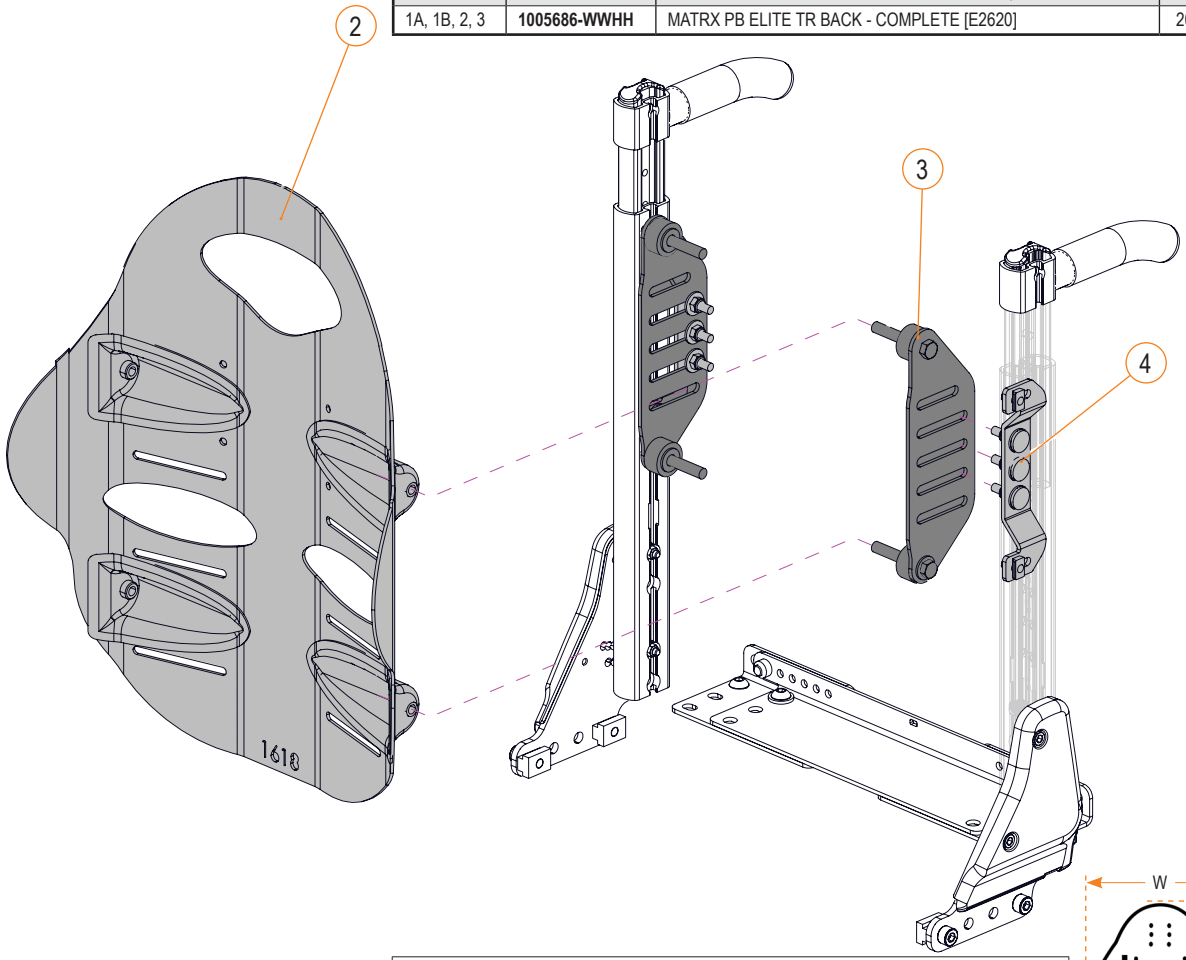

MATRX PB ELITE TR BACK SIGNATURE			
ITEM #	PART#	DESCRIPTION	EFFECTIVE
1A	**1004321-WWHH**	MATRX PB ELITE TR BACK COVER	2023-01-01
3	**1005634**	MATRX FSSU MOUNTING HARDWARE	2025-06-26
4A	**1005645**	MATRX INTERFACE DEEP MOUNTING BRACKET, FIXED	2025-06-26
4B	**1005646**	MATRX INTERFACE SHALLOW MOUNTING BKT, RECLINE	2025-06-26
1A, 1B, 2, 3	**1005686-WWHH**	MATRX PB ELITE TR BACK - COMPLETE [E2620]	2025-06-26

CUSHION CODIFICATIONS
WIDTH (W) / HEIGHT (H) (BACK HEIGHTS ARE AVAILABLE IN 14, 16, 18 AND 20 INCHES ONLY)
EXAMPLE: 1004321-2020, 1004320-2020 CUSHION WITH A WIDTH OF 20 IN. AND A HEIGHT OF 20 IN.

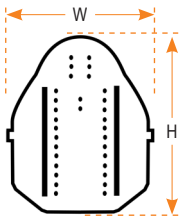

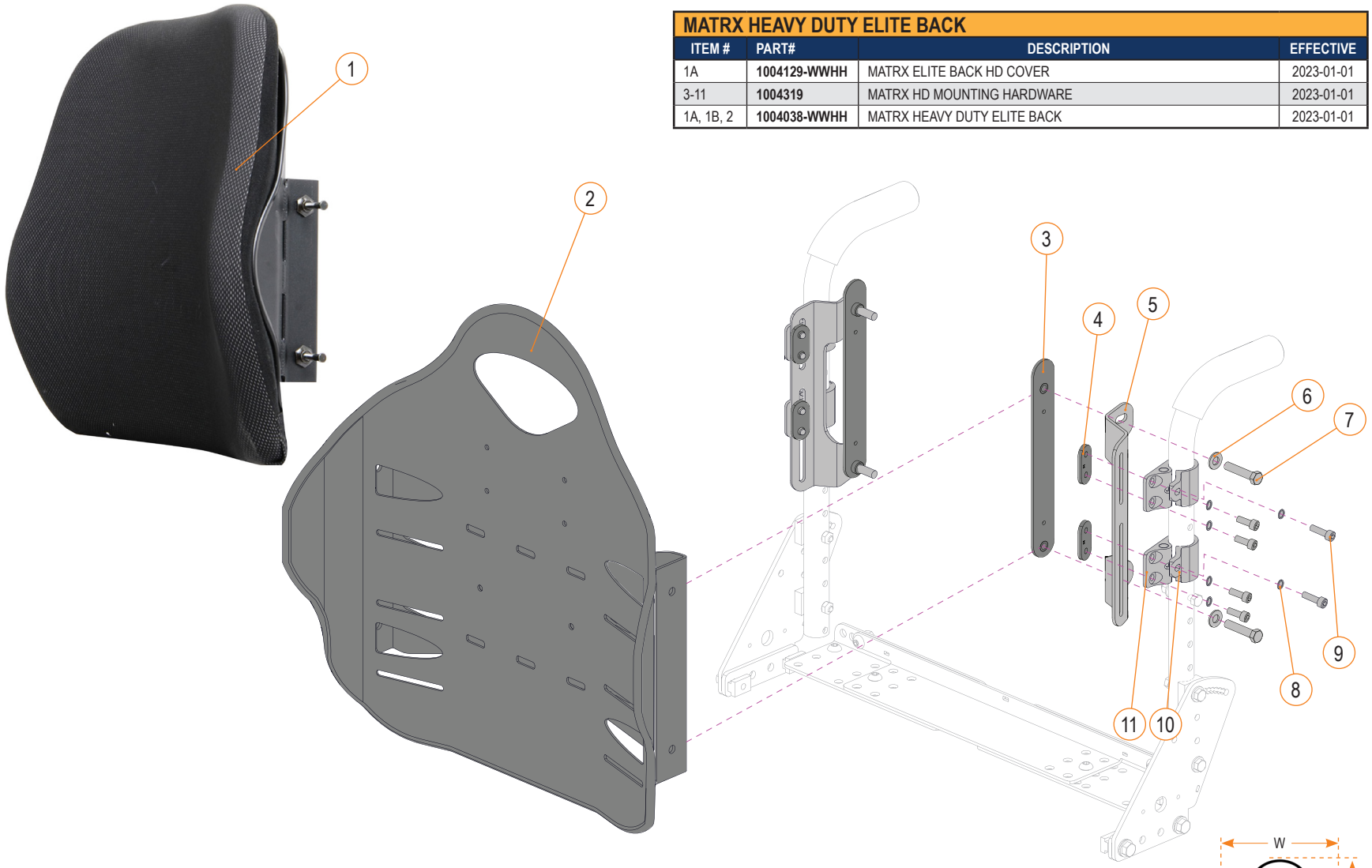

MATRX HEAVY DUTY ELITE BACK			
ITEM #	PART#	DESCRIPTION	EFFECTIVE
1A	**1004129-WWHH**	MATRX ELITE BACK HD COVER	2023-01-01
3-11	**1004319**	MATRX HD MOUNTING HARDWARE	2023-01-01
1A, 1B, 2	**1004038-WWHH**	MATRX HEAVY DUTY ELITE BACK	2023-01-01

CUSHION CODIFICATIONS
WIDTH (W) / HEIGHT (H) (BACK HEIGHTS ARE AVAILABLE IN 16 AND 20 INCHES ONLY)
EXAMPLE: 1004129-2420, 1004038-2420 CUSHION WITH A WIDTH OF 24 IN. AND A HEIGHT OF 20 IN.

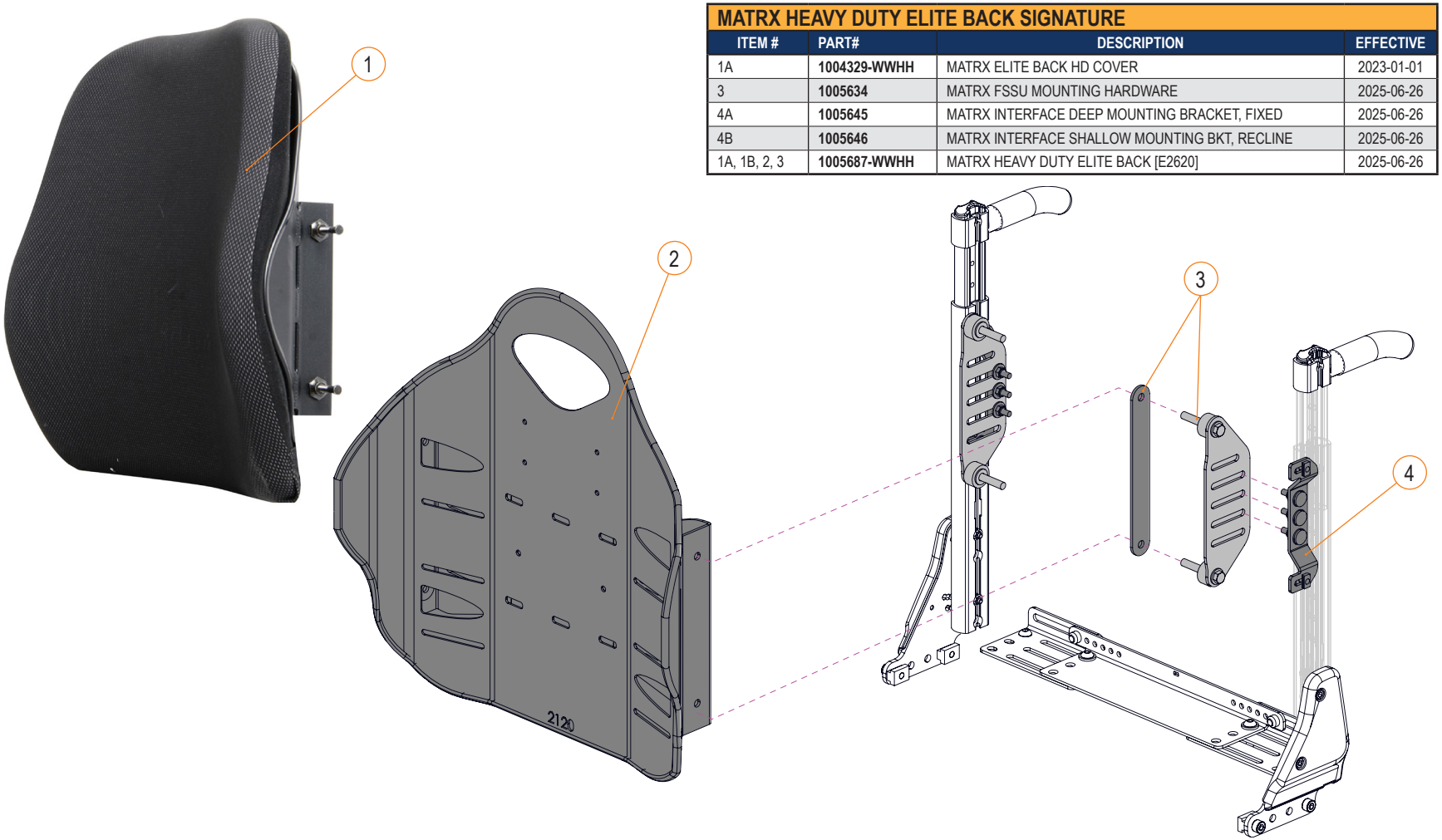

MATRX HEAVY DUTY ELITE BACK SIGNATURE			
ITEM #	PART#	DESCRIPTION	EFFECTIVE
1A	**1004329-WWHH**	MATRX ELITE BACK HD COVER	2023-01-01
3	**1005634**	MATRX FSSU MOUNTING HARDWARE	2025-06-26
4A	**1005645**	MATRX INTERFACE DEEP MOUNTING BRACKET, FIXED	2025-06-26
4B	**1005646**	MATRX INTERFACE SHALLOW MOUNTING BKT, RECLINE	2025-06-26
1A, 1B, 2, 3	**1005687-WWHH**	MATRX HEAVY DUTY ELITE BACK [E2620]	2025-06-26

CUSHION CODIFICATIONS
WIDTH (W) / HEIGHT (H) (BACK HEIGHTS ARE AVAILABLE IN 16 AND 20 INCHES ONLY)
EXAMPLE: 1004129-2420, 1004038-2420 CUSHION WITH A WIDTH OF 24 IN. AND A HEIGHT OF 20 IN.

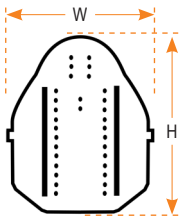

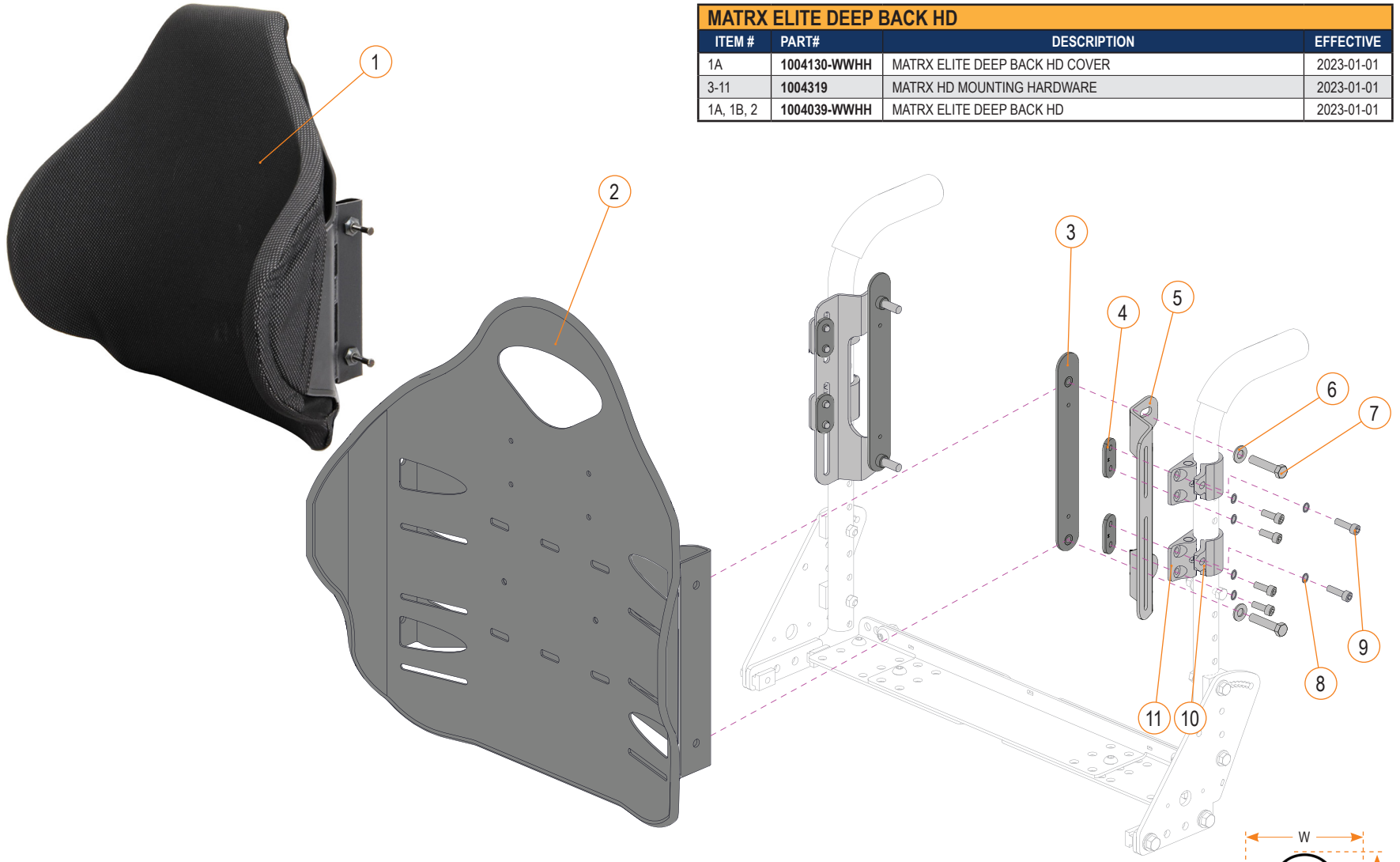

MATRX ELITE DEEP BACK HD			
ITEM #	PART#	DESCRIPTION	EFFECTIVE
1A	**1004130-WWHH**	MATRX ELITE DEEP BACK HD COVER	2023-01-01
3-11	**1004319**	MATRX HD MOUNTING HARDWARE	2023-01-01
1A, 1B, 2	**1004039-WWHH**	MATRX ELITE DEEP BACK HD	2023-01-01

CUSHION CODIFICATIONS
WIDTH (W) / HEIGHT (H) (BACK HEIGHTS ARE AVAILABLE IN 16, 18 AND 20 INCHES ONLY)
EXAMPLE: 1004130-2420, 1004039-2420 CUSHION WITH A WIDTH OF 24 IN. AND A HEIGHT OF 20 IN.

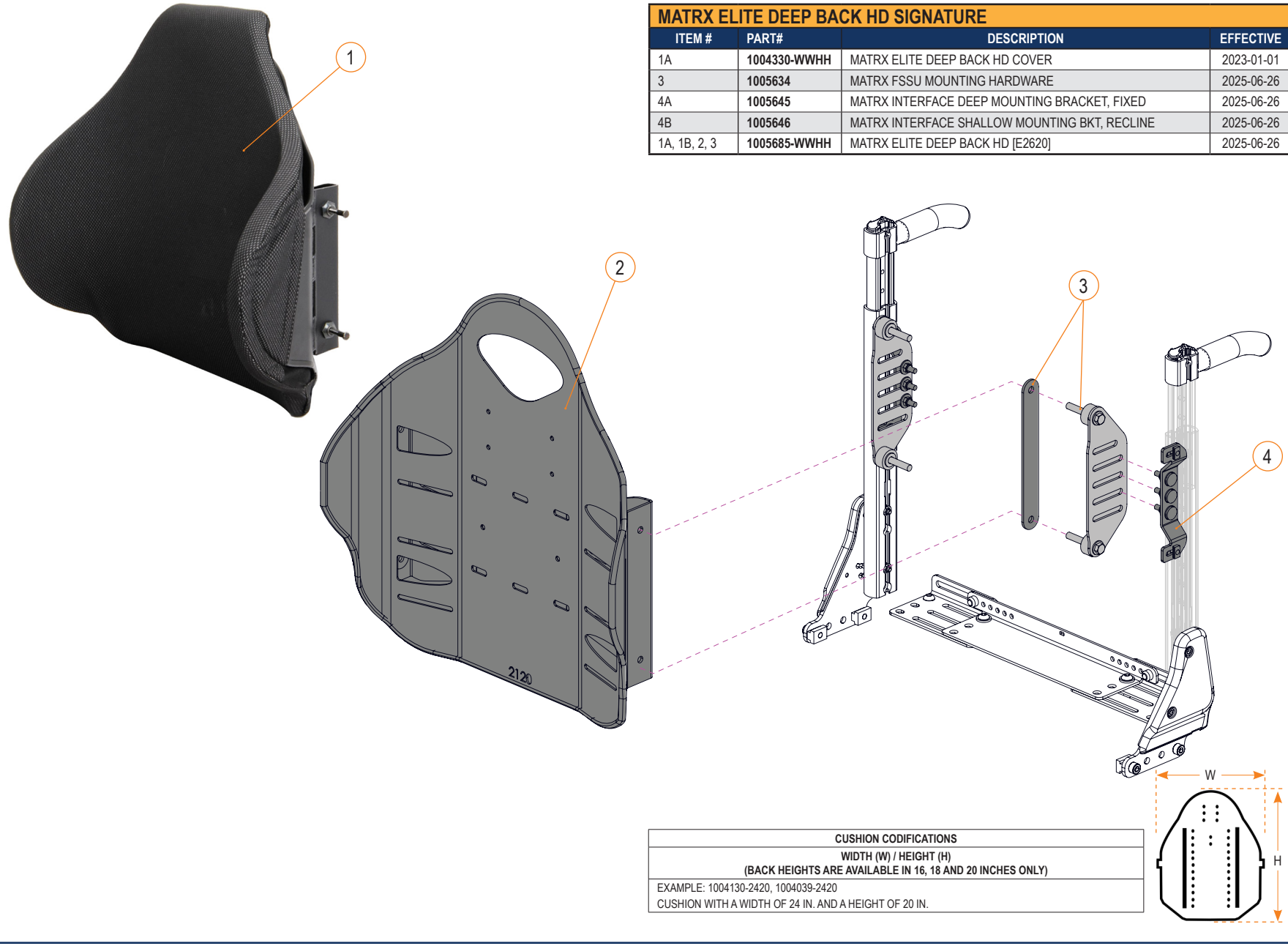

MATRX ELITE DEEP BACK HD SIGNATURE			
ITEM #	PART#	DESCRIPTION	EFFECTIVE
1A	**1004330-WWHH**	MATRX ELITE DEEP BACK HD COVER	2023-01-01
3	**1005634**	MATRX FSSU MOUNTING HARDWARE	2025-06-26
4A	**1005645**	MATRX INTERFACE DEEP MOUNTING BRACKET, FIXED	2025-06-26
4B	**1005646**	MATRX INTERFACE SHALLOW MOUNTING BKT, RECLINE	2025-06-26
1A, 1B, 2, 3	**1005685-WWHH**	MATRX ELITE DEEP BACK HD [E2620]	2025-06-26

CUSHION CODIFICATIONS
WIDTH (W) / HEIGHT (H) (BACK HEIGHTS ARE AVAILABLE IN 16, 18 AND 20 INCHES ONLY)
EXAMPLE: 1004130-2420, 1004039-2420 CUSHION WITH A WIDTH OF 24 IN. AND A HEIGHT OF 20 IN.

NXT BIO FIT SEAT CUSHION			
ITEM #	PART #	DESCRIPTION	EFFECTIVE
1A	**H3WWDD-1**	NXT BIO FIT SEAT CUSHION REPLACEMENT COVER	2016-11-09
1B	**H3WWDD-2**	NXT BIO FIT SEAT CUSHION INCONTINENCE COVER	2016-11-09
1-2	**H3WWDD**	NXT BIO FIT SEAT CUSHION	2016-11-09





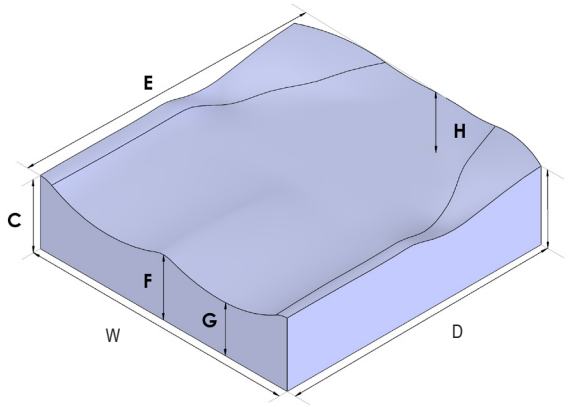

CUSHION CODIFICATIONS
H3 / WIDTH (W) / DEPTH (D)
EXAMPLE: H31818 CUSHION WITH A WIDTH OF 18 IN. AND A DEPTH OF 18 IN.



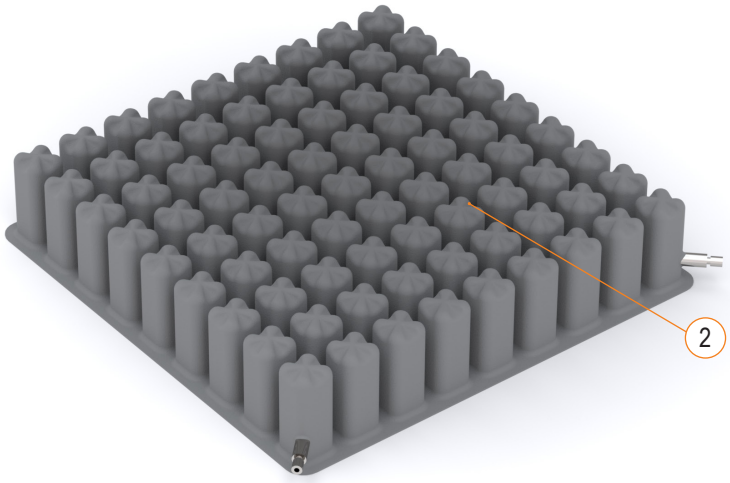





CG AIR SEAT CUSHION

ITEM #	PART #	DESCRIPTION	EFFECTIVE
1A	**CGASCWWDD-H**	STANDARD COVER FOR CG AIR	2017-05-01
1B	**CGA3DWWDD-H**	3D MESH COVER FOR CG AIR	2017-05-01
1C	**CGAICWWDD-H**	INCONTINENCE COVER FOR CG AIR	2017-05-01
2	**CGAXVWWDD-H**	CG AIR CUSHION W/O COVER	2017-05-01
3	**CGA-PUMP**	CG AIR HAND PUMP	2017-05-01
4	**CGA-GLOVE**	ASSESSMENT GLOVE FOR CG AIR W/ LOGO	2017-05-01
5	**1001402**	CG AIR REPAIR KIT - 3 ALCOHOL PREP PADS	2023-09-11
6	**CUST-133627-01**	TREILLIS DE TRANSFERT, NOIR	2023-09-11



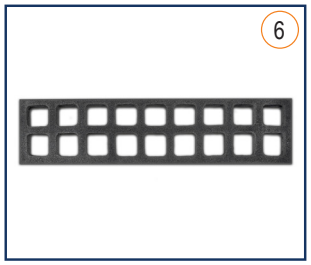

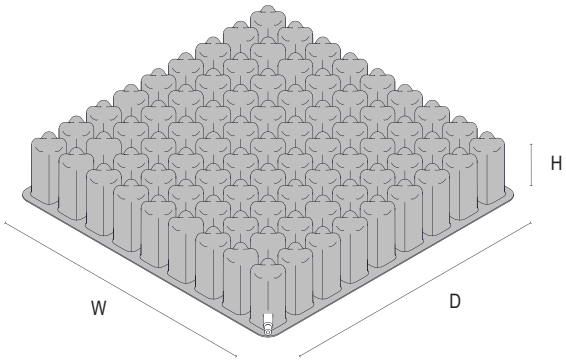

CUSHION CODIFICATIONS
NUMBER OF VALVE (X) / WIDTH (W) / DEPTH (D) / HEIGHT (H)
EXAMPLE: CGA2V1418-3 CUSHION WITH 2 VALVES, A WIDTH OF 14 IN., A DEPTH OF 18 IN. AND A HEIGHT OF 3 IN.

COVER CODIFICATIONS
WIDTH (W) / DEPTH (D) / HEIGHT (H)
EXAMPLE: CGASC1012-2 STANDARD COVER WITH A WIDTH OF 10 IN., A DEPTH OF 12 IN. AND A HEIGHT OF 2 IN.



PERFORMA CG AIR CUSHION

ITEM #	PART #	DESCRIPTION	EFFECTIVE
1A	**PCGASCWWDD-H**	STANDARD COVER, PERFORMA CG AIR	2025-09-01
1B	**PCGA3DWWDD-H**	3D COVER, PERFORMA CG AIR	2025-09-01
1C	**PCGAICWWDD-H**	INCONTINENCE COVER, CG AIR	2017-05-01
1D	**PCGA3DLLD**	PERFORMA CG AIR, 3D COVER, LEG LENGTH DISCREPANCY	2025-09-01
1E	**PCGASCLLD**	PERFORMA CG AIR, STD COVER, LEG LENGTH DISCREPANCY	2025-09-01
2	**PCGA1VWWDD-H**	PERFORMA CG AIR 1 VALVE, NO COVER	2025-09-01
3	**PCGA2VWWDD-H**	PERFORMA CG AIR 2 VALVES, NO COVER	2025-09-01
3A	**PCGA-2VLR** *	PERFORMA CG AIR, NO COVER, CG AIR OPTION, 2 VALVES, LEFT/ RIGHT	2025-09-01
3B	**PCGA-2VF6** *	PERFORMA CG AIR, NO COVER, CG AIR OPTION, 2 VALVES, FRONT/REAR, 6 IN	2025-09-01
3C	**PCGA-2VF8** *	PERFORMA CG AIR, NO COVER, CG AIR OPTION, 2 VALVES, FRONT/REAR, 8 IN	2025-09-01
3D	**PCGA-2VF10** *	PERFORMA CG AIR, NO COVER, CG AIR OPTION, 2 VALVES, FRONT/REAR, 10 IN	2025-09-01
4	**PCGA-PUMP**	CG AIR HAND PUMP	2017-05-01
5	**PCGA-GLOVE**	ASSESMENT GLOVE FOR CG AIR W/ LOGO	2017-05-01
6	**1001402**	CG AIR REPAIR KIT - 3 ALCOHOL PREP PADS	2023-09-11
7	**1005551-XX**	TRANSFER TRELLIS	2025-09-01
8	**1005549-WWDD**	ANATOMICAL CONTOUR 2IN	2025-09-01
9	**1005455**	SEAT POUCH, PERFORMA	2025-09-01
10	**PCGA-GZ-P**	GRIPZONE, ANTI-SLIP TECHNOLOG (Chose a cover between 1A, 1B, 1D or 1E)	2025-09-01

***CODE TO ADD TO CONFIGURE A 2-VALVE CUSHION**

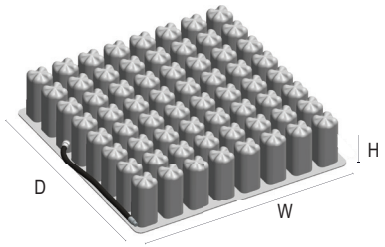

CUSHION CODIFICATIONS
NUMBER OF VALVE (X) / WIDTH (W) / DEPTH (D) / HEIGHT (H)
EXAMPLE: CGA2V1418-3 CUSHION WITH 2 VALVES, A WIDTH OF 14 IN., A DEPTH OF 18 IN. AND A HEIGHT OF 3 IN.

COVER CODIFICATIONS
WIDTH (W) / DEPTH (D) / HEIGHT (H)
EXAMPLE: CGASC1012-2 STANDARD COVER WITH A WIDTH OF 10 IN., A DEPTH OF 12 IN. AND A HEIGHT OF 2 IN.



PERFORMA BM SEAT CUSHION			
ITEM #	PART #	DESCRIPTION	EFFECTIVE
1A	**PBMSCWWDD-3**	STANDARD COVER FOR PERFORMA BM - WIDTH (WW) IN X DEPTH (DD) IN X HEIGHT (3 IN)	2020-10-12
1B	**PBM3DWWDD-3**	3D MESH COVER FOR PERFORMA BM - WIDTH (WW) IN X DEPTH (DD) IN X HEIGHT (3 IN)	2020-10-12
1C	**CGAICWWDD-3**	INCONTINENCE COVER FOR CG AIR - WIDTH (WW) IN X DEPTH (DD) IN X HEIGHT (3 IN)	2020-10-12
2A	**1001568**	INT INCONT COVER 16X16X3, TPU	2020-09-15
2B	**1001569**	INT INCONT COVER 16X18X3, TPU	2020-09-15
2C	**1001570**	INT INCONT COVER 16X20X3, TPU	2020-09-15
2D	**1001571**	INT INCONT COVER 18X16X3, TPU	2020-09-15
2E	**1001572**	INT INCONT COVER 18X18X3, TPU	2020-09-15
2F	**1001573**	INT INCONT COVER 18X20X3, TPU	2020-09-15
2G	**1001574**	INT INCONT COVER 20X16X3, TPU	2020-09-15
2H	**1001575**	INT INCONT COVER 20X18X3, TPU	2020-09-15
2I	**1001576**	INT INCONT COVER 20X20X3, TPU	2020-09-15
3	**1001426-WWDD-3**	PERFORMA BM CUSHION - WIDTH (WW) IN X DEPTH (DD) IN X HEIGHT (3 IN)	2020-10-15

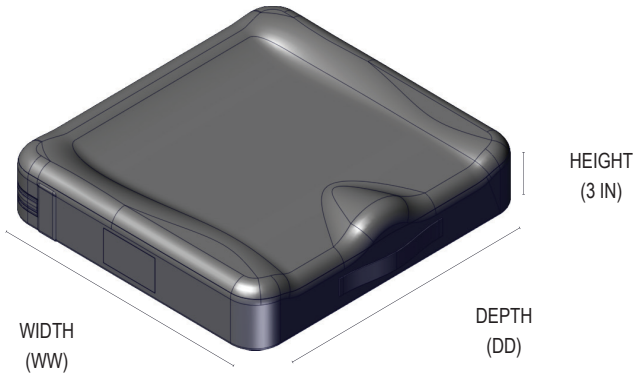



PERFORMA IAG SEAT CUSHION

ITEM #	PART #	DESCRIPTION	EFFECTIVE
1A	**PIAGSCWWDD-3**	STANDARD COVER FOR PERFORMA IAG - WIDTH (WW) IN X DEPTH (DD) IN X HEIGHT (3 IN)	2020-10-12
1B	**PIAG3DWWDD-3**	3D MESH COVER FOR PERFORMA IAG - WIDTH (WW) IN X DEPTH (DD) IN X HEIGHT (3 IN)	2020-10-12
1C	**CGAICWWDD-3**	INCONTINENCE COVER FOR CG AIR - WIDTH (WW) IN X DEPTH (DD) IN X HEIGHT (3 IN)	2020-10-12
2A	**1001568**	INT INCONT COVER 16X16X3, TPU	2020-09-15
2B	**1001569**	INT INCONT COVER 16X18X3, TPU	2020-09-15
2C	**1001570**	INT INCONT COVER 16X20X3, TPU	2020-09-15
2D	**1001571**	INT INCONT COVER 18X16X3, TPU	2020-09-15
2E	**1001572**	INT INCONT COVER 18X18X3, TPU	2020-09-15
2F	**1001573**	INT INCONT COVER 18X20X3, TPU	2020-09-15
2G	**1001574**	INT INCONT COVER 20X16X3, TPU	2020-09-15
2H	**1001575**	INT INCONT COVER 20X18X3, TPU	2020-09-15
2I	**1001576**	INT INCONT COVER 20X20X3, TPU	2020-09-15
3	**1001501-WWDD-3**	PERFORMA IAG CUSHION - WIDTH (WW) IN X DEPTH (DD) IN X HEIGHT (3 IN)	2020-10-15
4A	**1001476**	SELF INFLATING AIR INSERT, 10W X 8D X 1.5H TPU	2020-08-27
4B	**1001477**	SELF INFLATING AIR INSERT, 13W X 8D X 1.5H TPU	2020-08-27
5A	**1001480**	BOTTOM PLATE FOR CUSHION, SMALL	2020-08-31
5B	**1001481**	BOTTOM PLATE FOR CUSHION, LARGE	2020-08-31

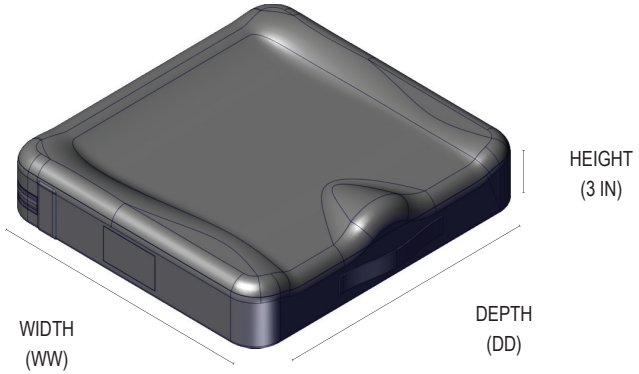

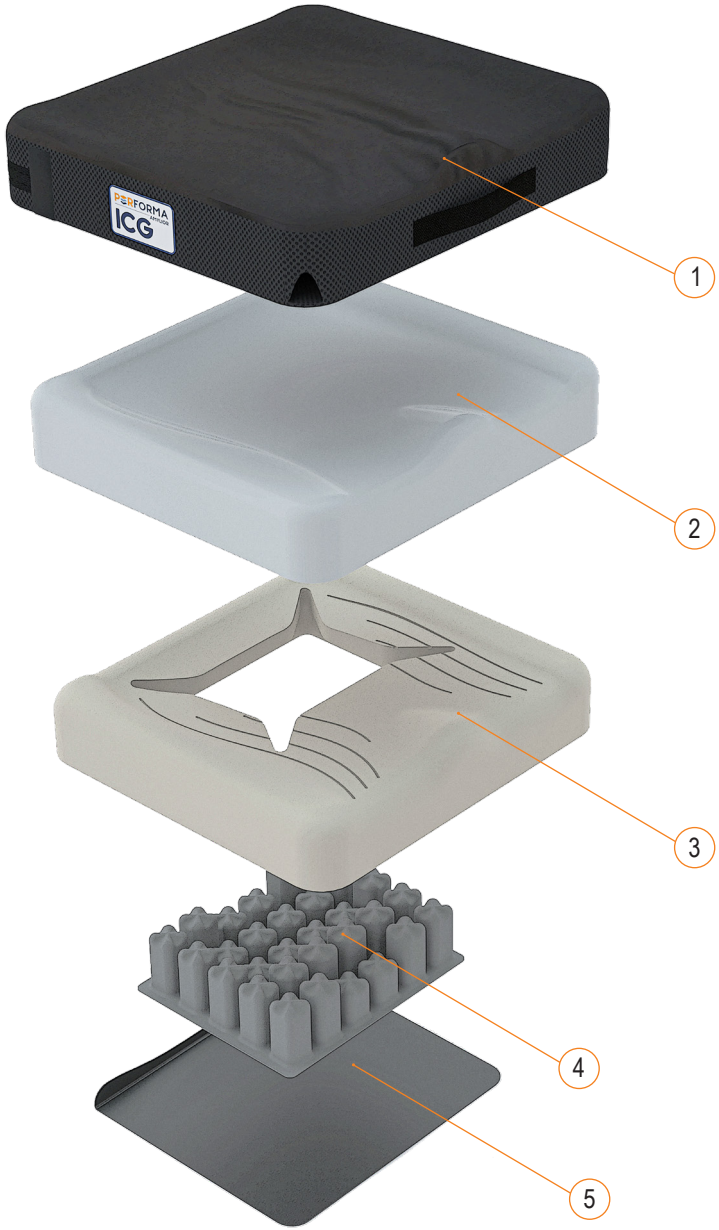

PERFORMA ICG SEAT CUSHION

ITEM #	PART #	DESCRIPTION	EFFECTIVE
1A	**PICGSCWWDD-3**	STANDARD COVER FOR PERFORMA ICG - WIDTH (WW) IN X DEPTH (DD) IN X HEIGHT (3 IN)	2020-10-12
1B	**PICG3DWWDD-3**	3D MESH COVER FOR PERFORMA ICG - WIDTH (WW) IN X DEPTH (DD) IN X HEIGHT (3 IN)	2020-10-12
1C	**CGAICWWDD-3**	INCONTINENCE COVER FOR CG AIR - WIDTH (WW) IN X DEPTH (DD) IN X HEIGHT (3 IN)	2020-10-12
2A	**1001568**	INT INCONT COVER 16X16X3, TPU	2020-09-15
2B	**1001569**	INT INCONT COVER 16X18X3, TPU	2020-09-15
2C	**1001570**	INT INCONT COVER 16X20X3, TPU	2020-09-15
2D	**1001571**	INT INCONT COVER 18X16X3, TPU	2020-09-15
2E	**1001572**	INT INCONT COVER 18X18X3, TPU	2020-09-15
2F	**1001573**	INT INCONT COVER 18X20X3, TPU	2020-09-15
2G	**1001574**	INT INCONT COVER 20X16X3, TPU	2020-09-15
2H	**1001575**	INT INCONT COVER 20X18X3, TPU	2020-09-15
2I	**1001576**	INT INCONT COVER 20X20X3, TPU	2020-09-15
3	**1001498-WWDD-3**	PERFORMA ICG CUSHION - WIDTH (WW) IN X DEPTH (DD) IN X HEIGHT (3 IN)	2020-10-15
4A	**1001478**	IMMERSION AIR INSERT CG, 10W X 8D X 2-3H PVC	2020-08-27
4B	**1001479**	IMMERSION AIR INSERT CG, 12W X 10D X 2-3H PVC	2020-08-27
5A	**1001480**	BOTTOM PLATE FOR CUSHION, SMALL	2020-08-31
5B	**1001481**	BOTTOM PLATE FOR CUSHION, LARGE	2020-08-31
6	**CGA-PUMP**	CG AIR HAND PUMP	2017-05-01



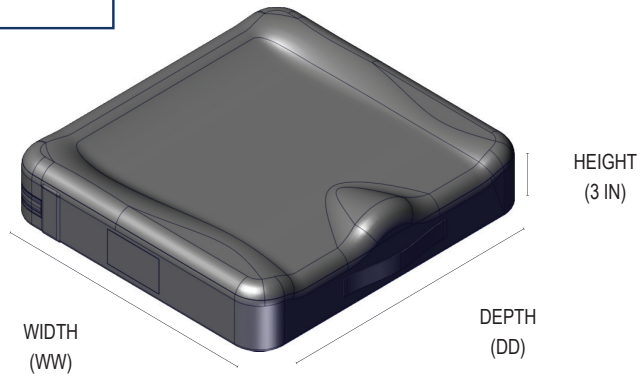

CONTOUR SEAT CUSHION

ITEM #	PART #	DESCRIPTION	EFFECTIVE
1	**1003073-WWDD**	REPLACEMENT COVER, CONTOUR SEAT CUSHION	2021-05-07
2	**1003074**	INCONTINENCE COVER, CONTOUR SEAT CUSHION	2021-05-07
1-3	**1003075-WWDD**	CONTOUR SEAT CUSHION	2021-05-07







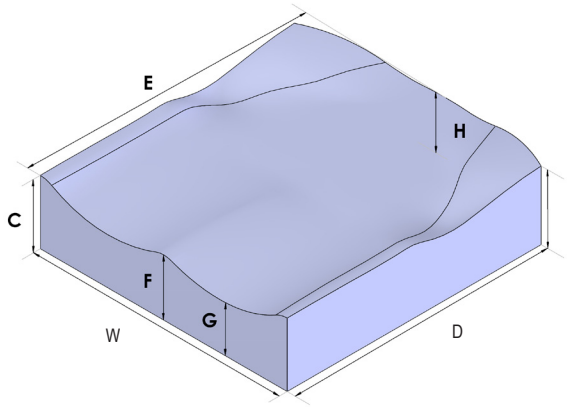

CUSHION CODIFICATIONS
1003075 / WIDTH (W) / DEPTH (D)
EXAMPLE: 1003075-1818 CUSHION WITH A WIDTH OF 18 IN. AND A DEPTH OF 18 IN.

CONTOUR SEAT CUSHION			
ITEM #	PART #	DESCRIPTION	EFFECTIVE
1	**1004068-WWDD**	REPLACEMENT COVER, CONTOUR SEAT CUSHION	2022-12-01
1-2	**1004069-WWDD**	CONTOUR SEAT CUSHION	2022-12-01



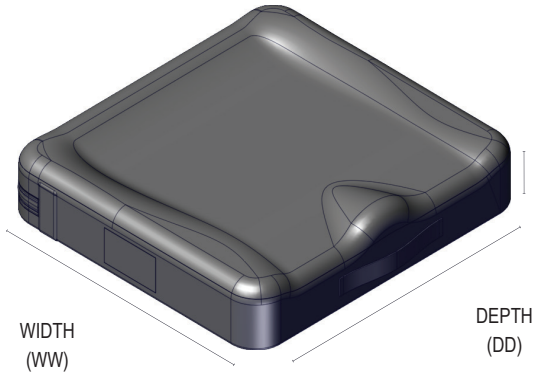

CUSHION CODIFICATIONS
1004069 / WIDTH (W) / DEPTH (D)
EXAMPLE: 1004069-2824 CUSHION WITH A WIDTH OF 28 IN. AND A DEPTH OF 24 IN.

MATRX PSP CUSHION			
ITEM #	PART #	DESCRIPTION	EFFECTIVE
1A	**1004131-WWDD**	MATRX PSP POLYMER CUSHION COVER	2023-01-01
1-2	**1004040-WWDD**	MATRX PSP POLYMER CUSHION	2023-01-01

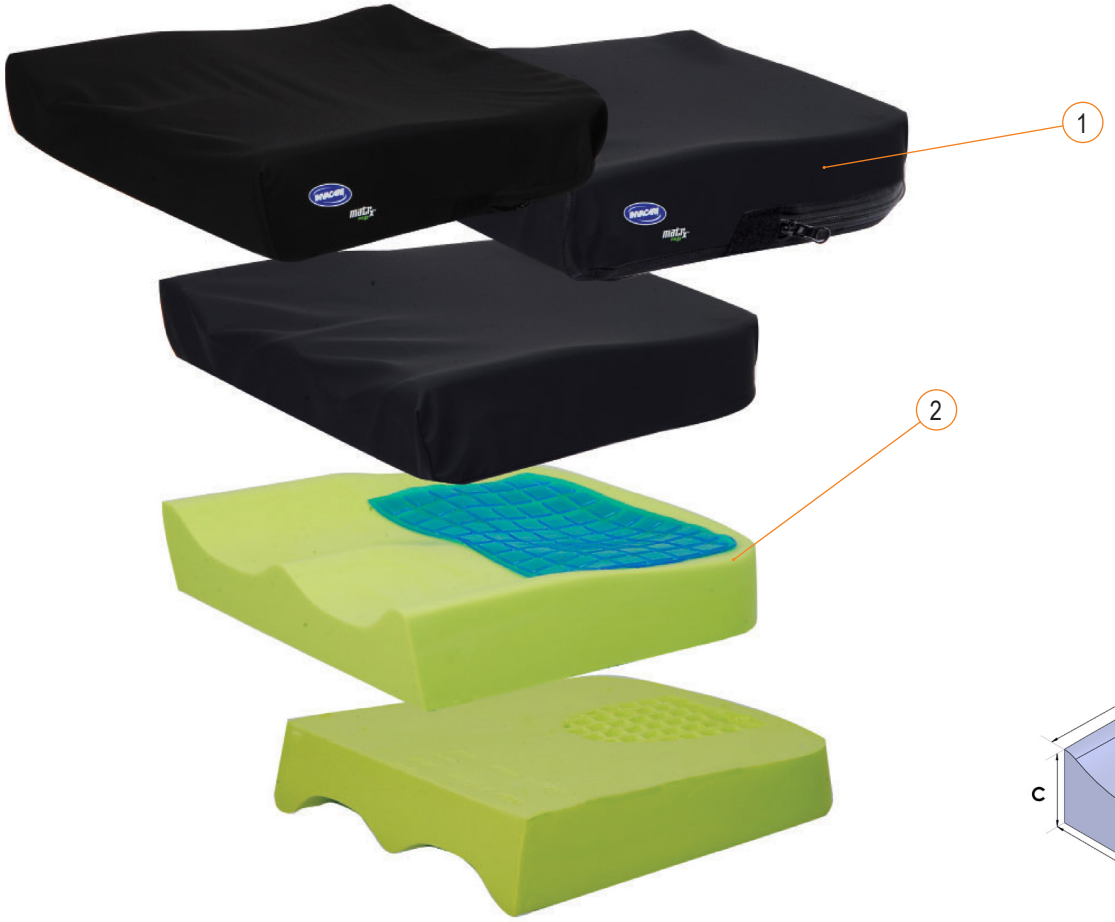

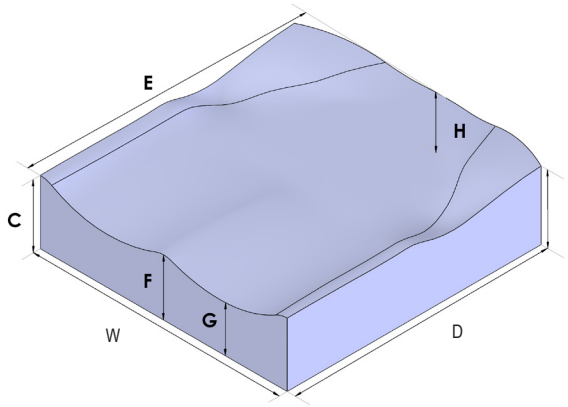

CUSHION CODIFICATIONS
1004131 / WIDTH (W) / DEPTH (D) - 1004040 / WIDTH (W) / DEPTH (D)
EXAMPLE: **1004131-**1818, 1004040-1818 CUSHION WITH A WIDTH OF 18 IN. AND A DEPTH OF 18 IN.

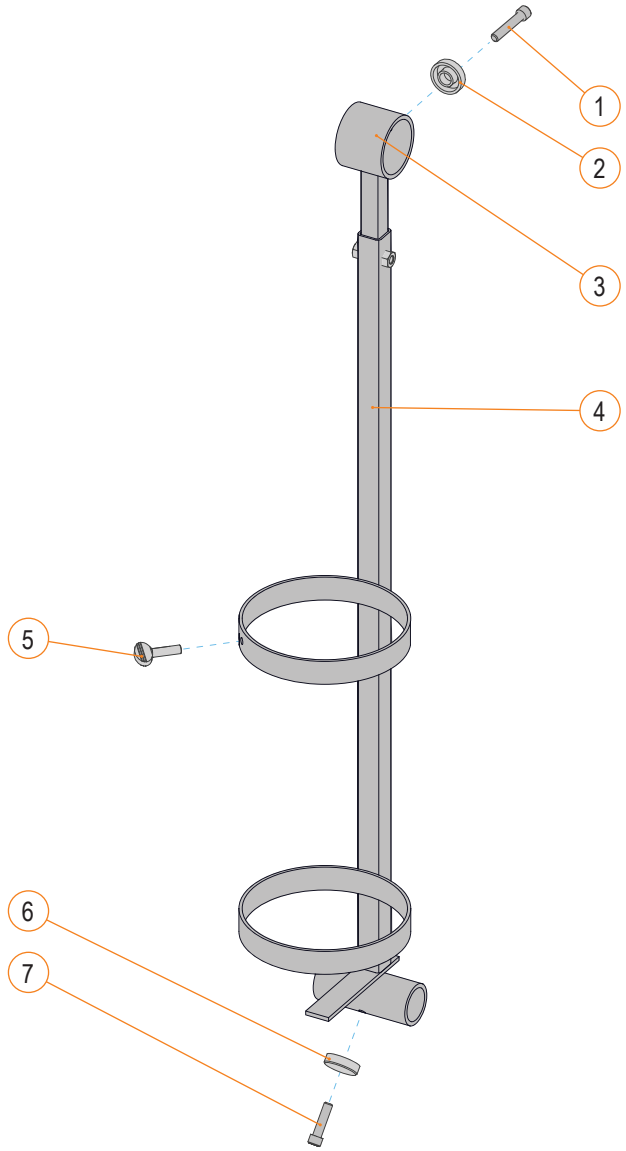

O2 HOLDER FOR FIXED BACK ANGLES			
ITEM #	PART #	DESCRIPTION	EFFECTIVE
1-7	**C-3600**	O2 HOLDER FOR MANUAL CHAIR	2008-04-30

RAM MOUNT UNIVERSAL X-GRIP FOR CELL & SMALL TABLET			
ITEM #	PART #	DESCRIPTION	EFFECTIVE
6	**A34110**	RAM SHORT DOUBLE SOCKET ARM	2014-12-04
7	**A34112**	RAM DOUBLE 1 IN BALL ARM	2014-12-04
8A	**A34113**	RAM MEDIUM DOUBLE SOCKET ARM	2014-12-04
8B	**A34115**	RAM LONG DOUBLE SOCKET ARM	2014-12-04
9A	**A34114**	RAM UNIVERSAL XGRIP CELL PHONE HOLDER	2014-12-04
9B	**A34116**	RAM UNIVERSAL XGRIP SMALL TABLET HOLDER	2014-12-04
10	**K00057**	RAM MOUNT XGRIP CAPS, 4 PCS	2014-12-04
1-7, 8A, 9A, 10	**C-34106**	KIT FOR RAM UNIVERSAL XGRIP CELL PHONE HOLDER	2014-12-04
1-7, 8B, 9B, 10	**C-34107**	KIT FOR RAM UNIVERSAL XGRIP SMALL TABLET HOLDER	2014-12-04

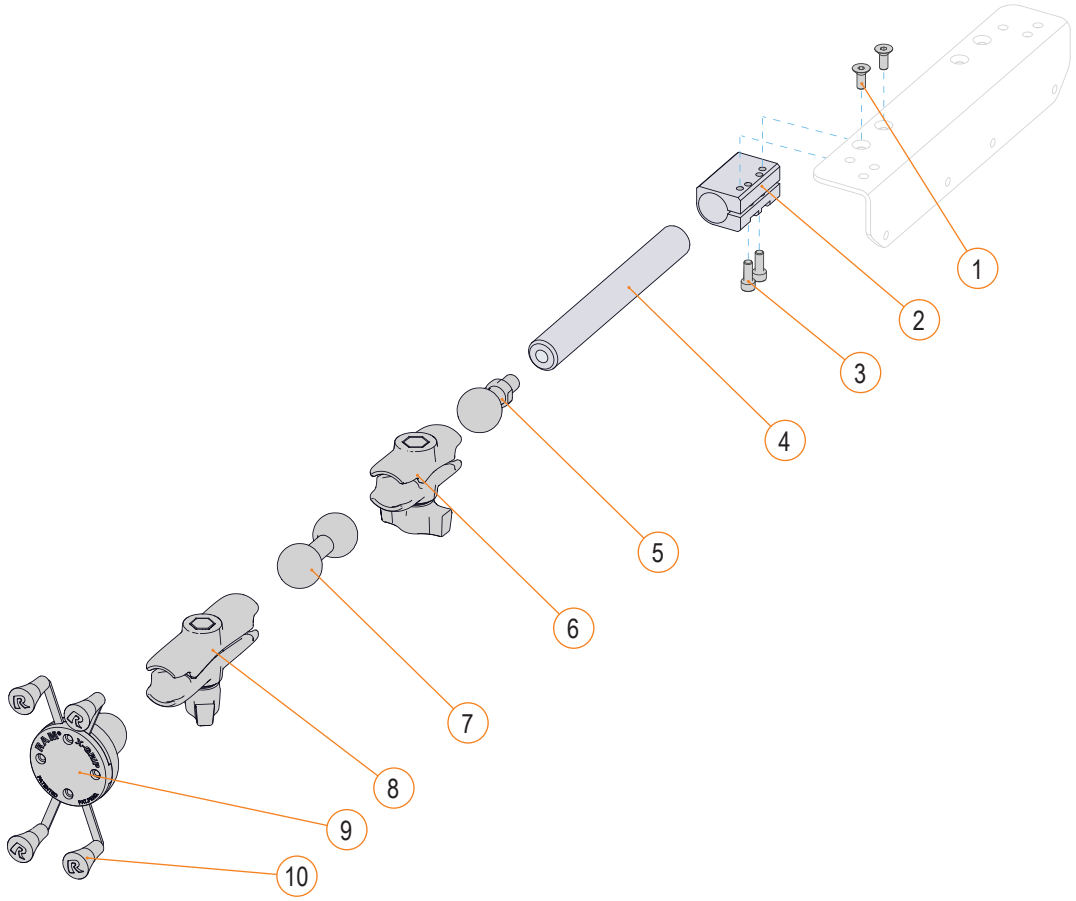

RAM MOUNT UNIVERSAL X-GRIP FOR CELL & SMALL TABLET			
ITEM #	PART #	DESCRIPTION	EFFECTIVE
2	**A34110**	RAM SHORT DOUBLE SOCKET ARM	2025-06-26
3	**A34112**	RAM DOUBLE 1 IN BALL ARM	2025-06-26
4A	**A34113**	RAM MEDIUM DOUBLE SOCKET ARM	2025-06-26
4B	**A34115**	RAM LONG DOUBLE SOCKET ARM	2025-06-26
5A	**A34114**	RAM UNIVERSAL XGRIP CELL PHONE HOLDER	2025-06-26
5B	**A34116**	RAM UNIVERSAL XGRIP SMALL TABLET HOLDER	2025-06-26
6	**K00057**	RAM MOUNT XGRIP CAPS, 4 PCS	2025-06-26
1-3, 4A ,5A, 6	**1005395**	KIT FOR RAM UNIVERSAL XGRIP CELL PHONE HOLDER	2025-06-26
1-3, 4B ,5B, 6	**1005396**	KIT FOR RAM UNIVERSAL XGRIP S TABLET HOLDER	2025-06-26

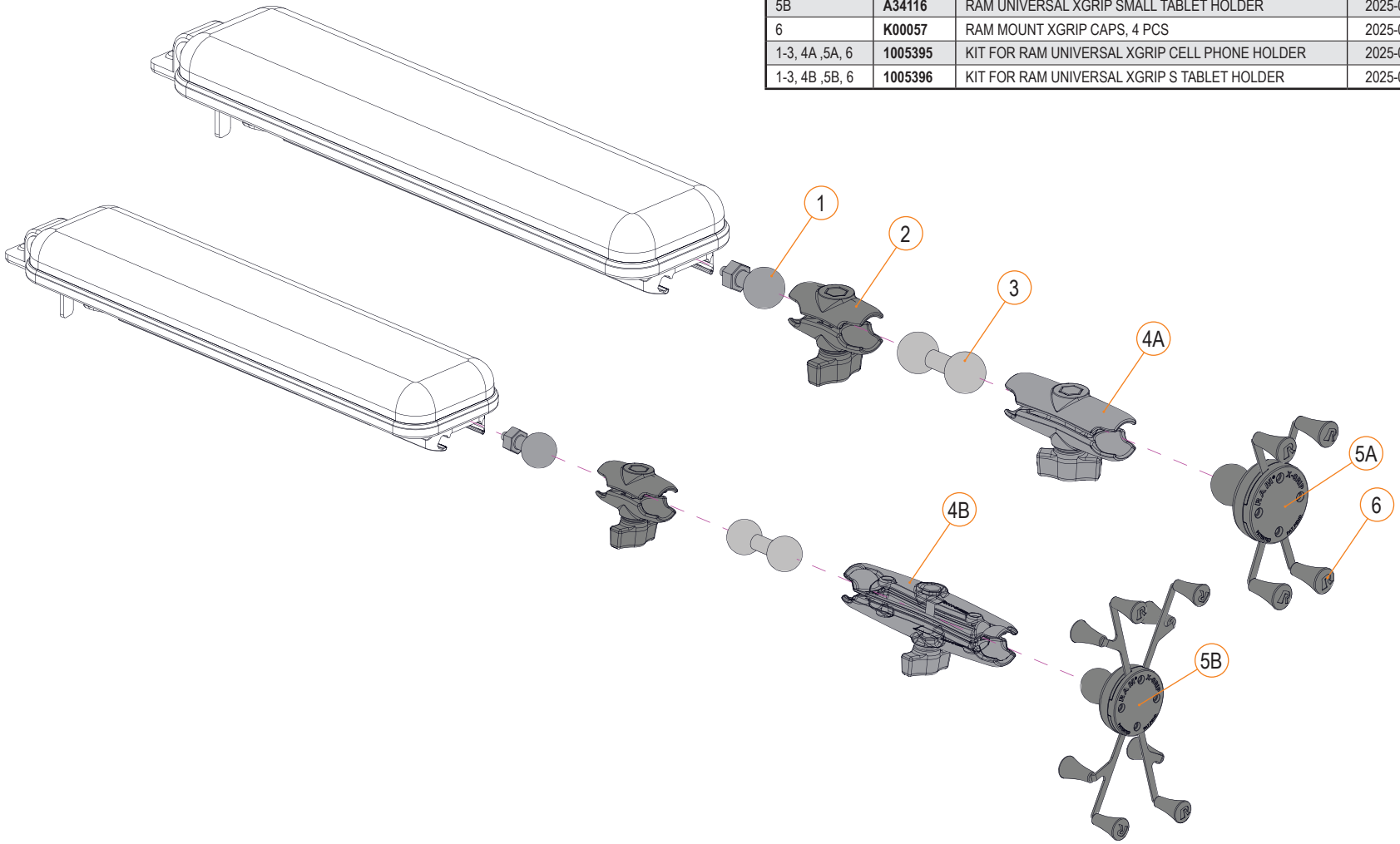

RAM MOUNT UNIVERSAL X-GRIP FOR LARGE TABLET			
ITEM #	PART #	DESCRIPTION	EFFECTIVE
6	**A34110**	RAM SHORT DOUBLE SOCKET ARM	2014-12-04
7	**A34112**	RAM DOUBLE 1 IN BALL ARM	2014-12-04
8	**A34115**	RAM LONG DOUBLE SOCKET ARM	2014-12-04
9	**A34117**	RAM ROUND PLATE 1 IN BALL	2014-12-04
10	**A34118**	RAM ROTO-VIEW ROTATING MOUNTING PLATE	2014-12-04
11	**A34119**	RAM UNIVERSAL XGRIP LARGE TABLET HOLDER	2014-12-04
12	**K00057**	RAM MOUNT XGRIP CAPS, 4 PCS	2014-12-04
1-12	**C-34108**	KIT FOR RAM UNIVERSAL XGRIP LARGE TABLET HOLDER	2014-12-04

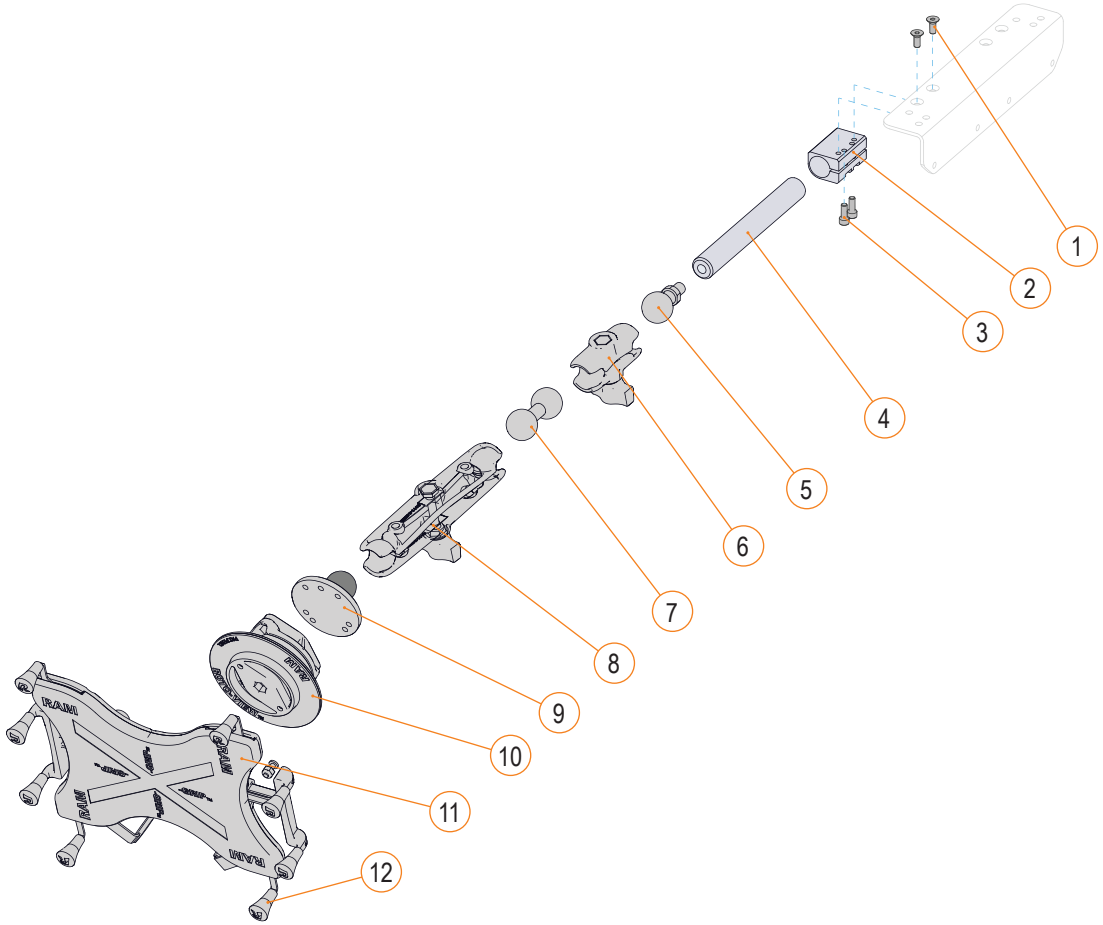

RAM MOUNT UNIVERSAL X-GRIP FOR LARGE TABLET			
ITEM #	PART #	DESCRIPTION	EFFECTIVE
2	**A34110**	RAM SHORT DOUBLE SOCKET ARM	2025-06-26
3	**A34112**	RAM DOUBLE 1 IN BALL ARM	2025-06-26
4	**A34115**	RAM MEDIUM DOUBLE SOCKET ARM	2025-06-26
5	**A34117**	RAM ROUND PLATE 1 IN BALL	2025-06-26
6	**A34118**	RAM ROTO-VIEW ROTATING MOUNTING PLATE	2025-06-26
7	**A34119**	RAM UNIVERSAL XGRIP LARGE TABLET HOLDER	2025-06-26
8	**K00057**	RAM MOUNT XGRIP CAPS, 4 PCS	2025-06-26
1-8	**1005397**	KIT FOR RAM UNIVERSAL XGRIP L TABLET HOLDER	2025-06-26

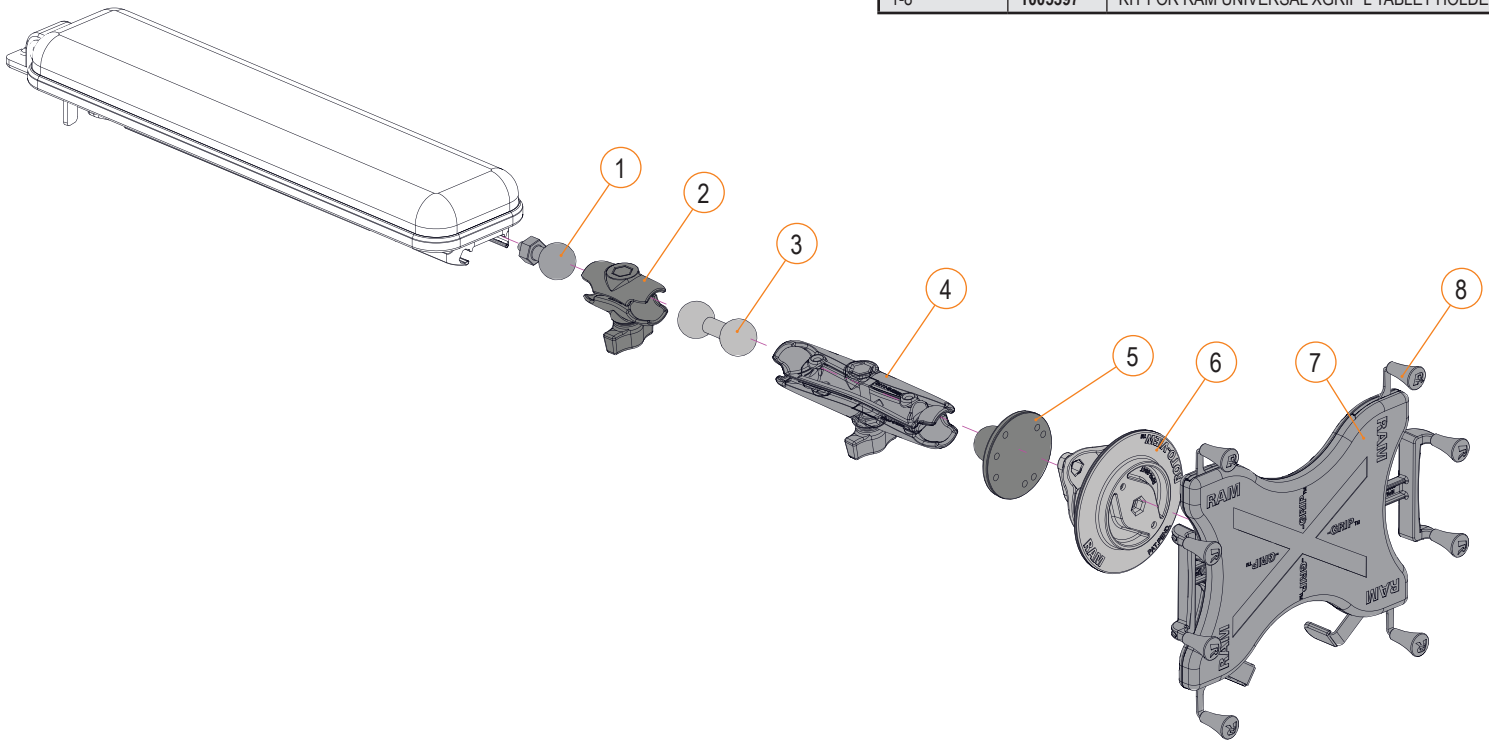

RAM MOUNT CUP HOLDER			
ITEM #	PART #	DESCRIPTION	EFFECTIVE
6	**A34110**	RAM SHORT DOUBLE SOCKET ARM	2014-12-04
7	**A34111**	RAM SELF LEVELING CUP HOLDER	2014-12-04
1-7	**C-34105**	KIT FOR RAM SELF LEVELING CUP HOLDER	2014-12-04

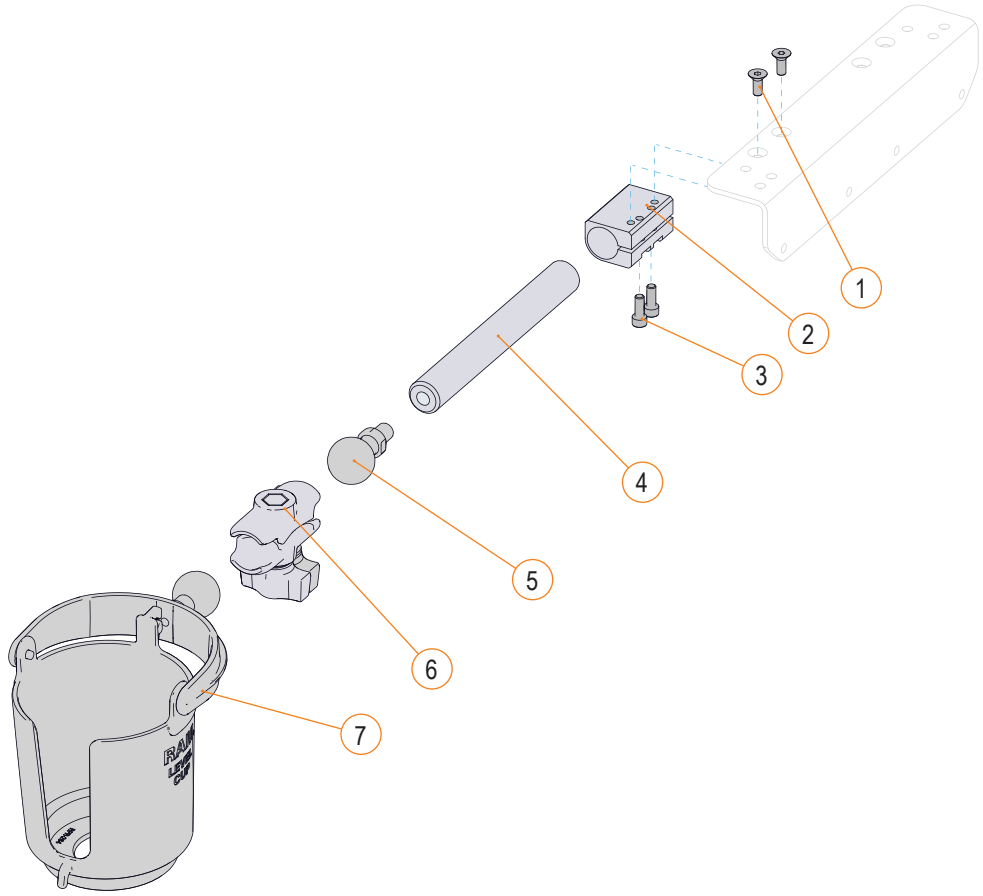

RAM MOUNT CUP HOLDER

ITEM #	PART #	DESCRIPTION	EFFECTIVE
2	**A34110**	RAM SHORT DOUBLE SOCKET ARM	2025-06-26
3	**A34111**	RAM SELF LEVELING CUP HOLDER	2025-06-26
1-3	**1005394**	KIT FOR RAM SELF LEVELING CUP HOLDER	2025-06-26

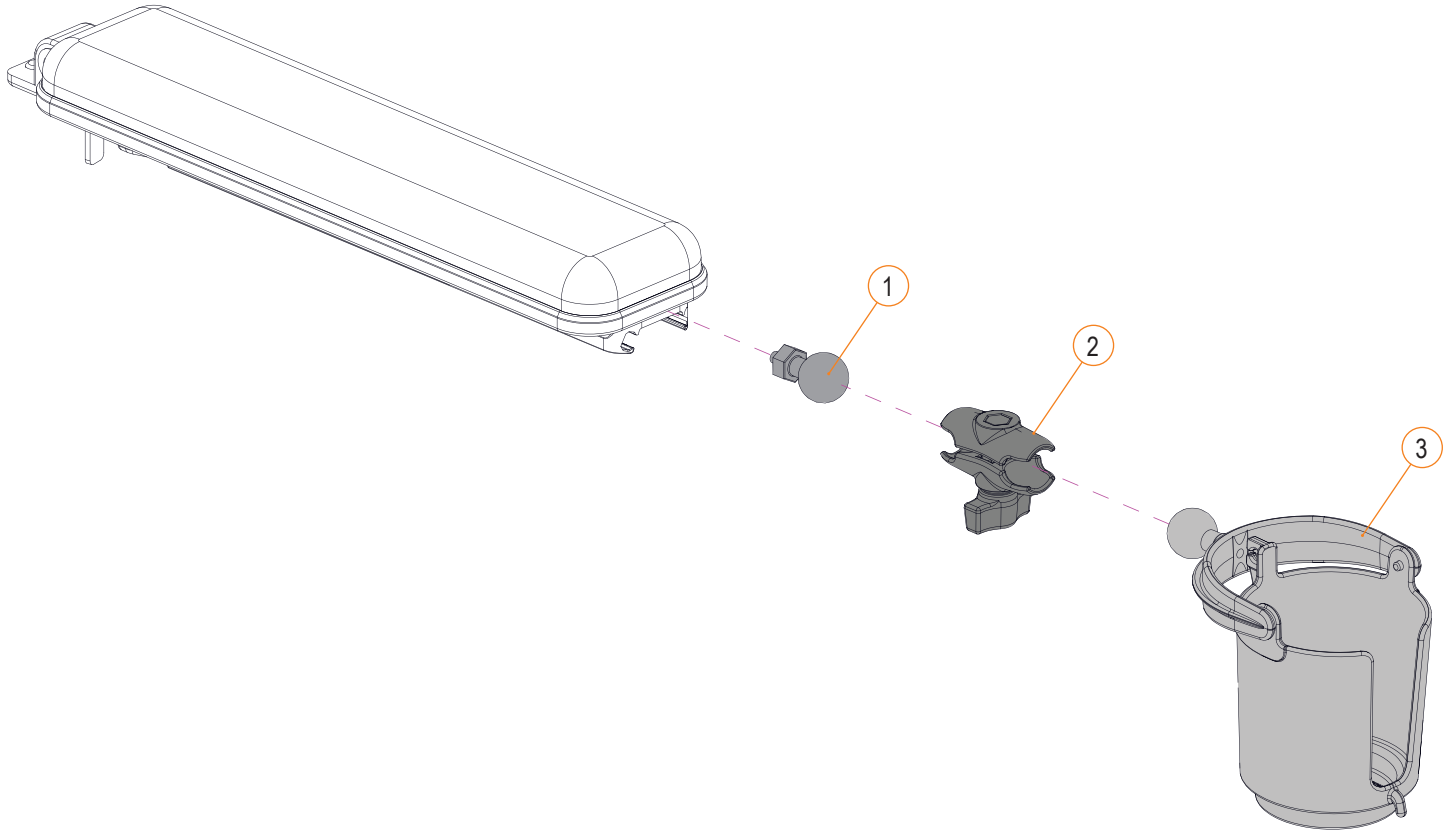

BACKPACK & SIDE POUCH

ITEM #	PART #	DESCRIPTION	EFFECTIVE
1	H00120	BACKPACK, 17 IN H X 14 IN L, BLACK	2020-03-19
2	1001020	BACKPACK STRAP, 12 IN LG X 1 IN WD, BLACK	2019-08-21
3	H00121	ARMREST POUCH, 8 IN H X 10 IN L, BLACK	2019-05-10







REFLECTOR STICKERS			
ITEM #	PART #	DESCRIPTION	EFFECTIVE
1-3	**1003071**	KIT, REFLECTOR STICKERS	2021-05-07

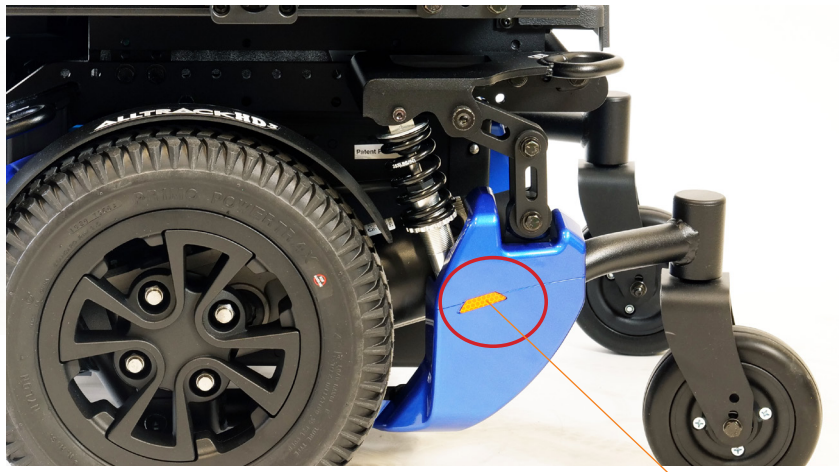

VISIBILITY FLAG WITH POLE			
ITEM #	PART #	DESCRIPTION	EFFECTIVE
1,2	**1003070**	KIT, VISIBILITY FLAG WITH POLE	2021-05-07

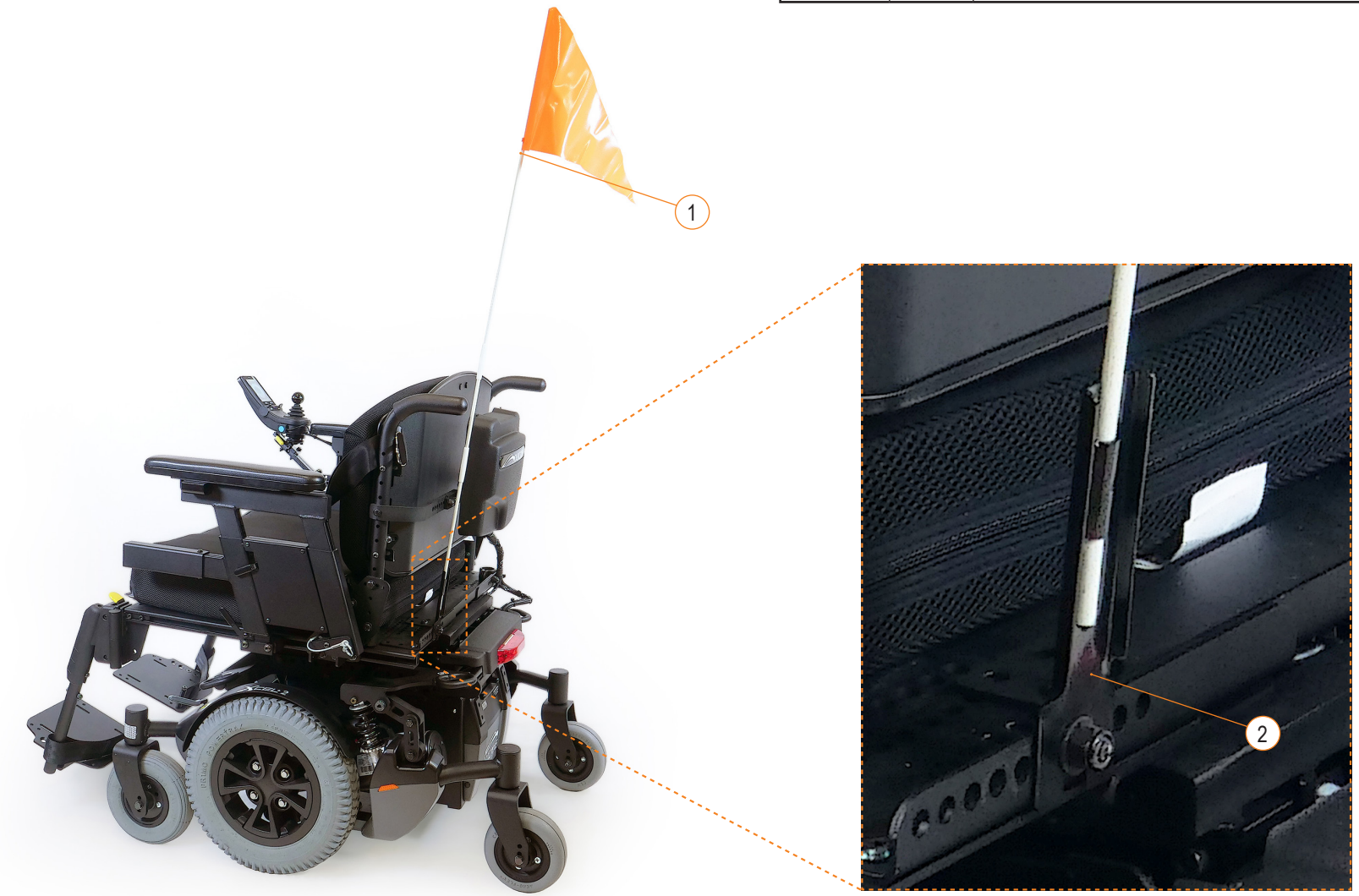

SIGNATURE HARDWARE KITS			
ITEM #	PART #	DESCRIPTION	EFFECTIVE
1	**1005533**	KIT, SIGNATURE HARDWARE, DEALER	2025-11-01
2	**1055332**	KIT, SIGNATURE HARDWARE	2026-01-08



